Mechanical Design Status of RF Components

- Square Bend
  - Transformer
- Cold Test Wrap Around Mode Converter
- Four Load Tree
- NLCTA Upgrade

Square Bend

- RF and Mechanical Design Complete
- Fabrication in Process
- Cold Test in March/April

Cross Section of Square Bend

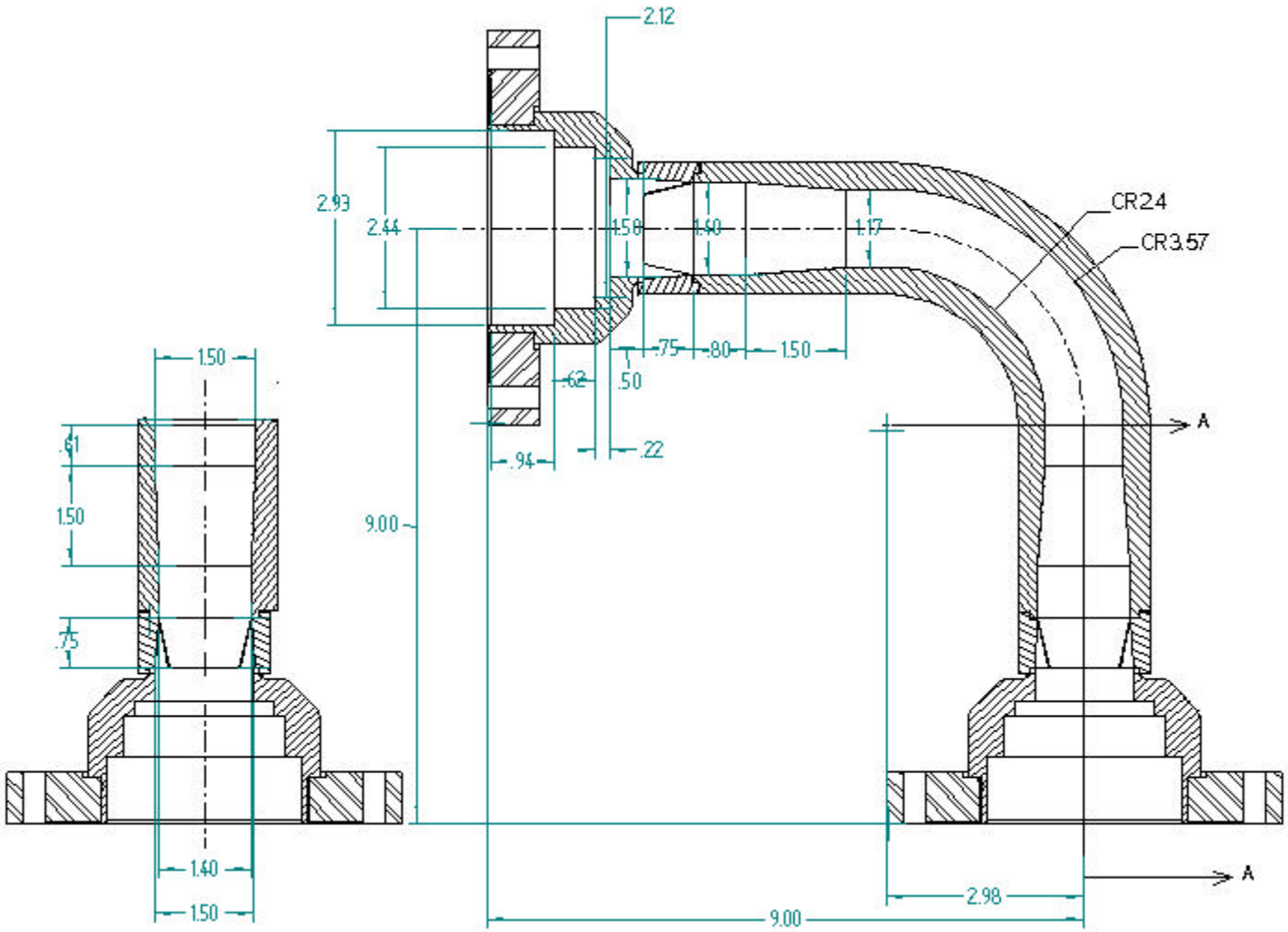

Transformer: ∅1.5 inch to ∅2.93 inch

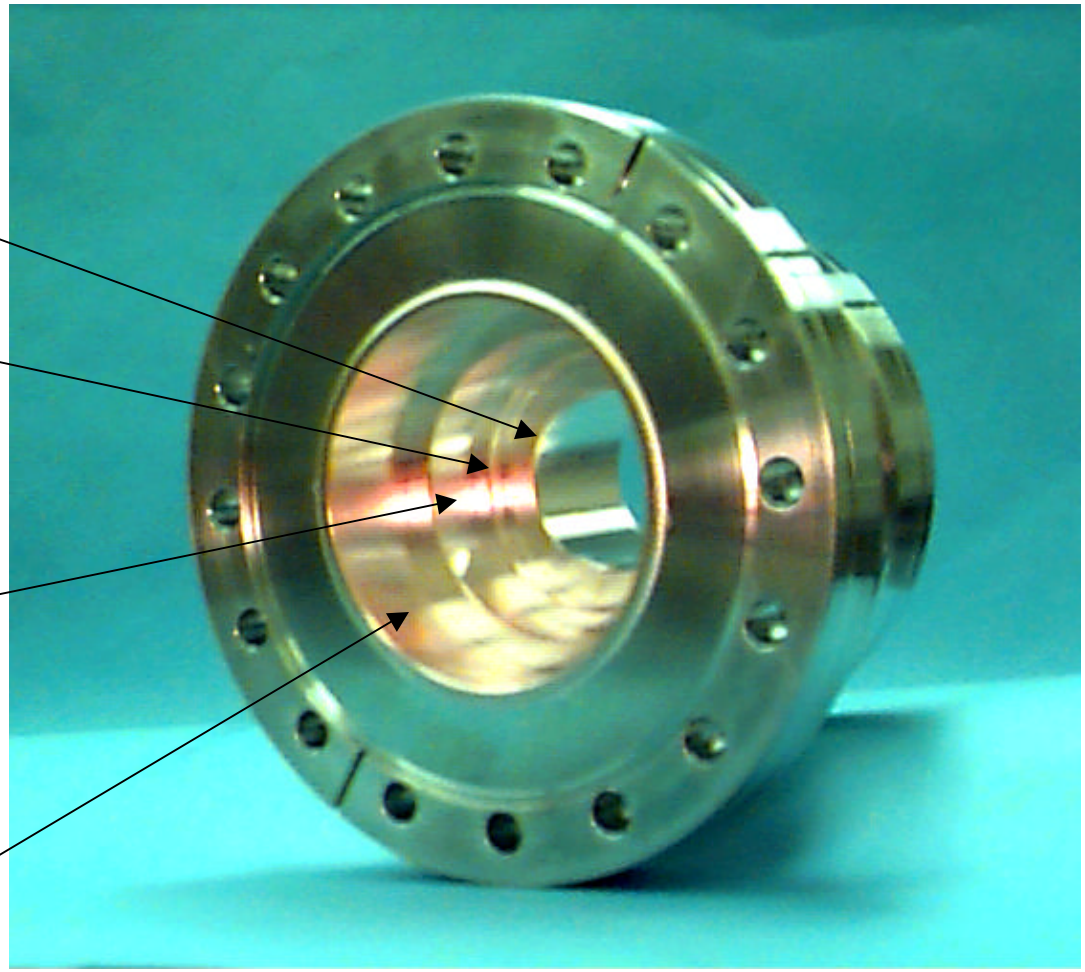

Square Bend: Prototype of Body in Aluminum

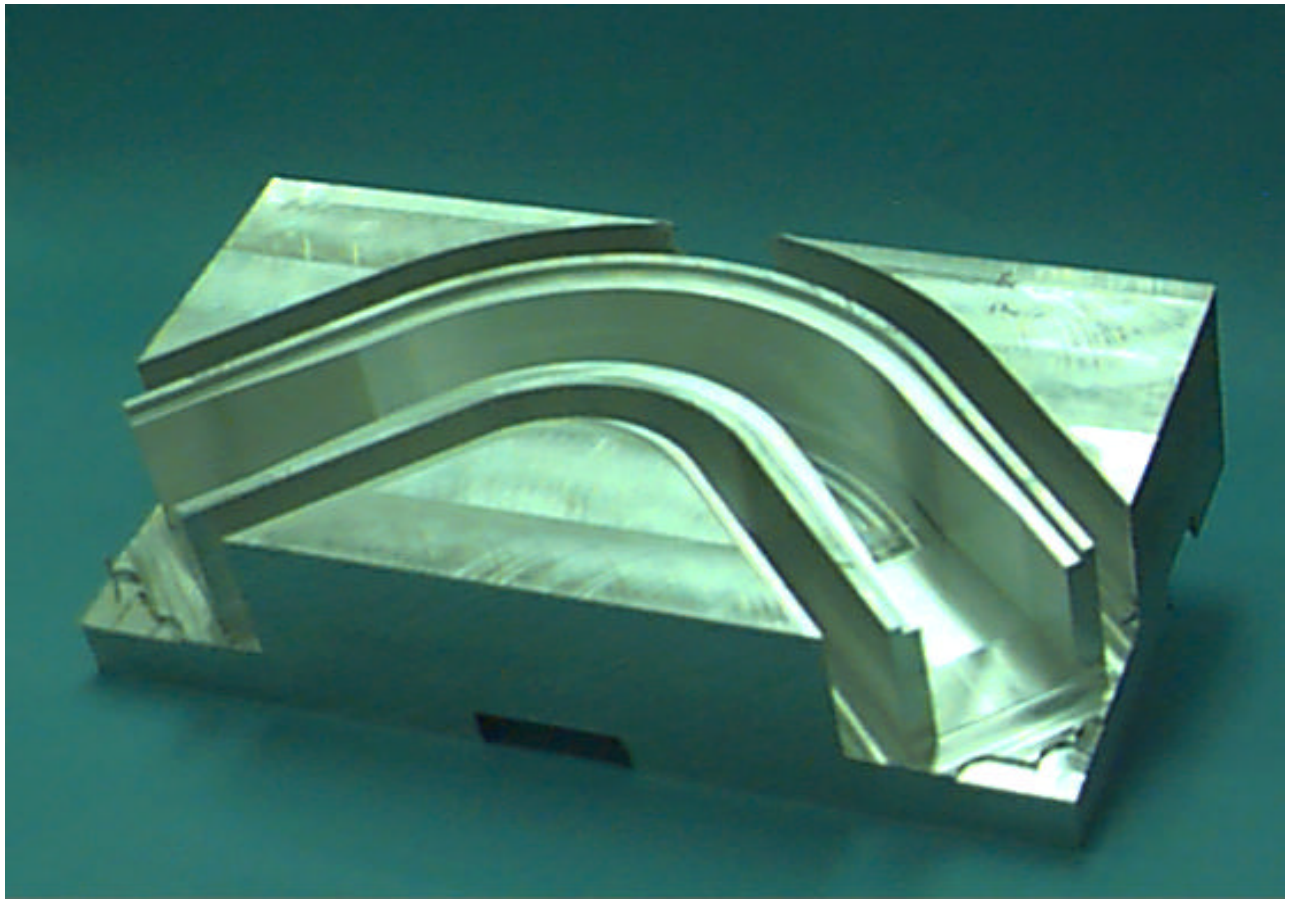

Square Bend: Prototype of Lid in Aluminum

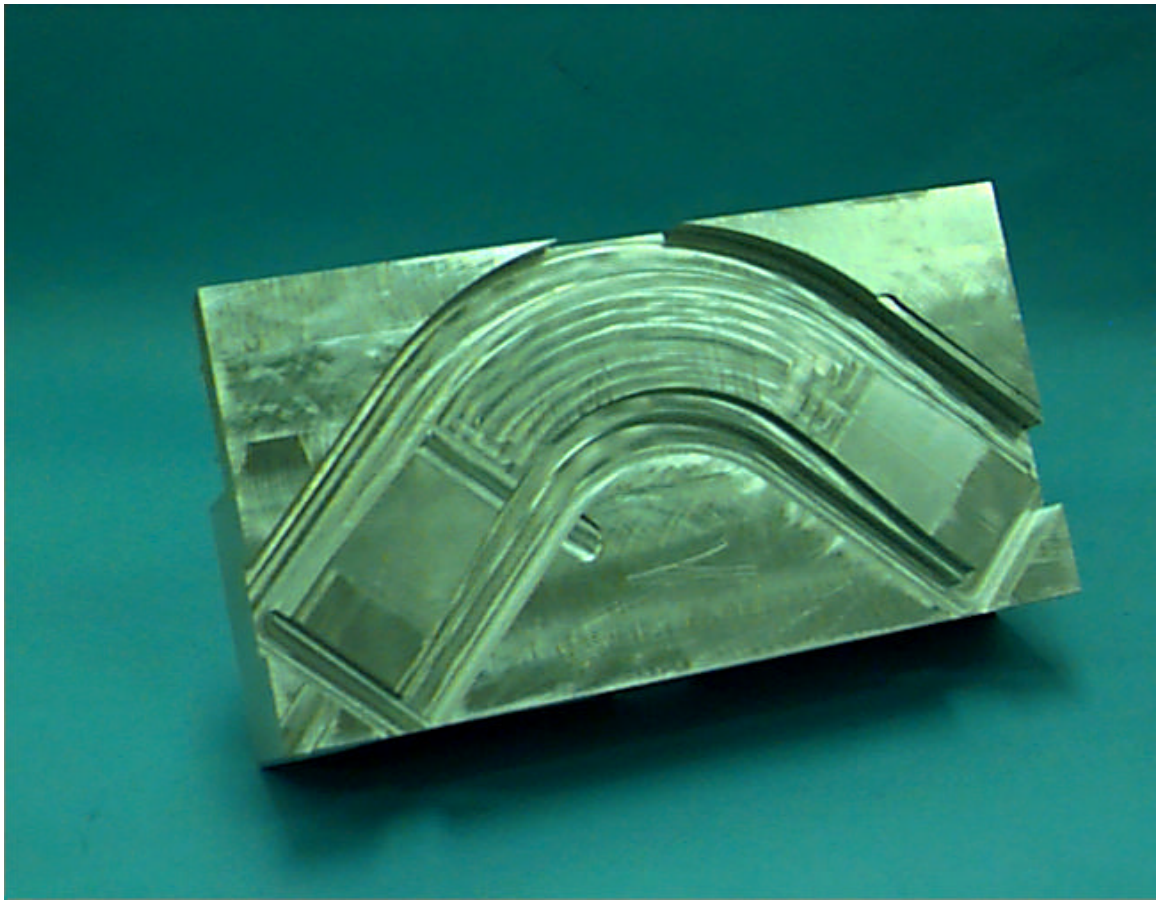

Square Bend: Circular to Round Transition

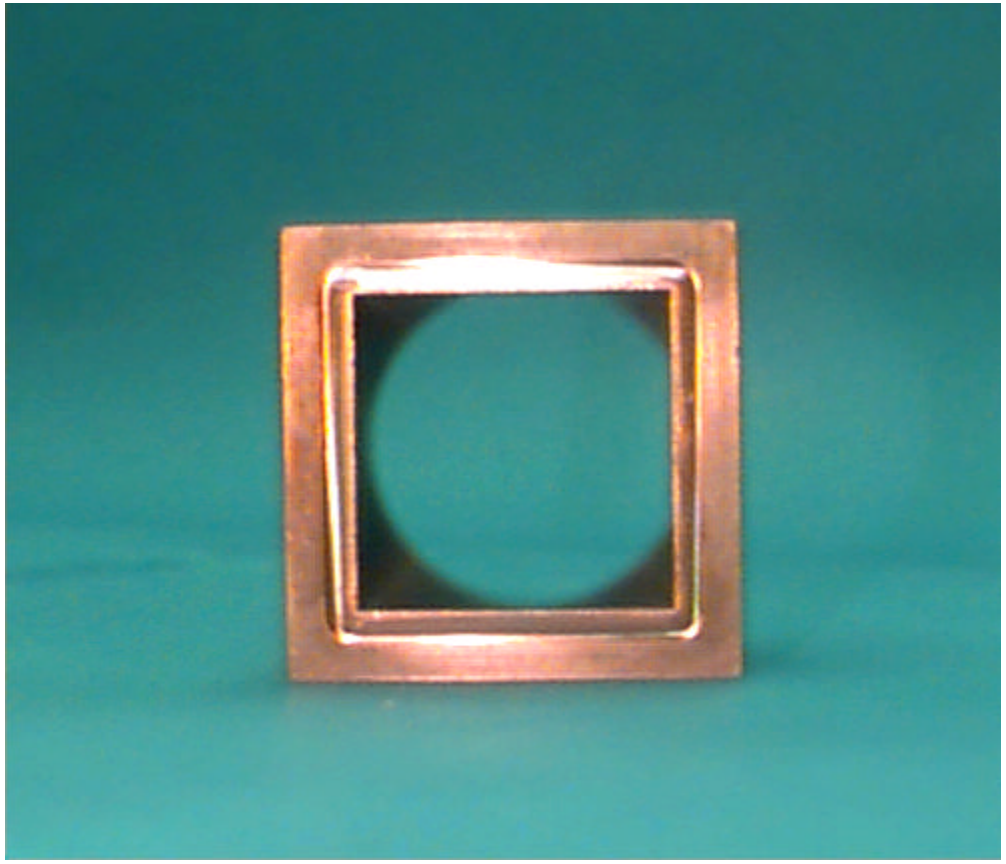

Cold Test WAMC

- RF and Mechanical design complete
- Fabrication in process
- Ready for cold test in march

Cross Section of Cold test WAMC

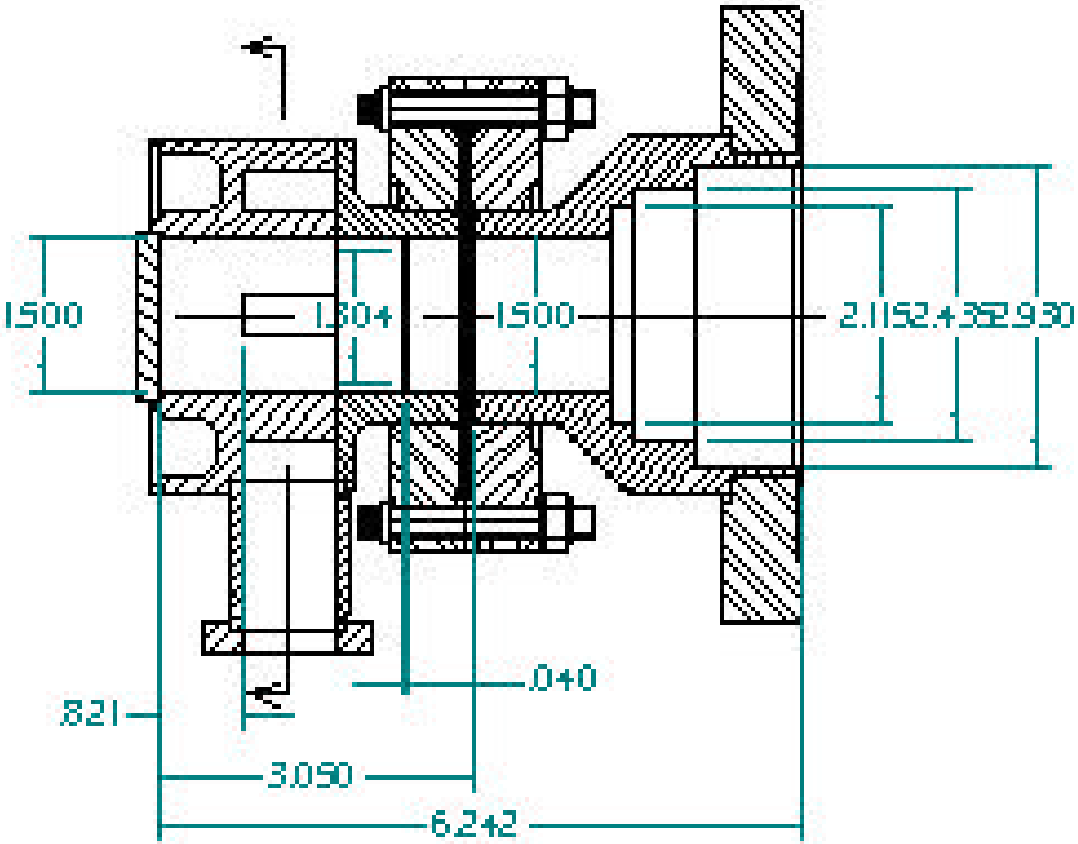

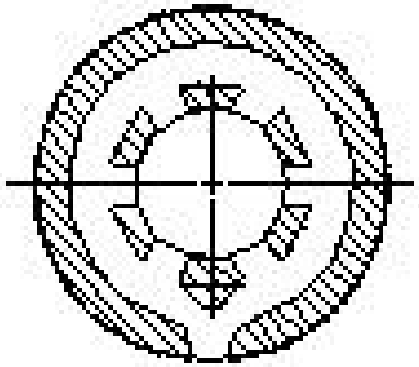

Wrap Around Mode Converter Body

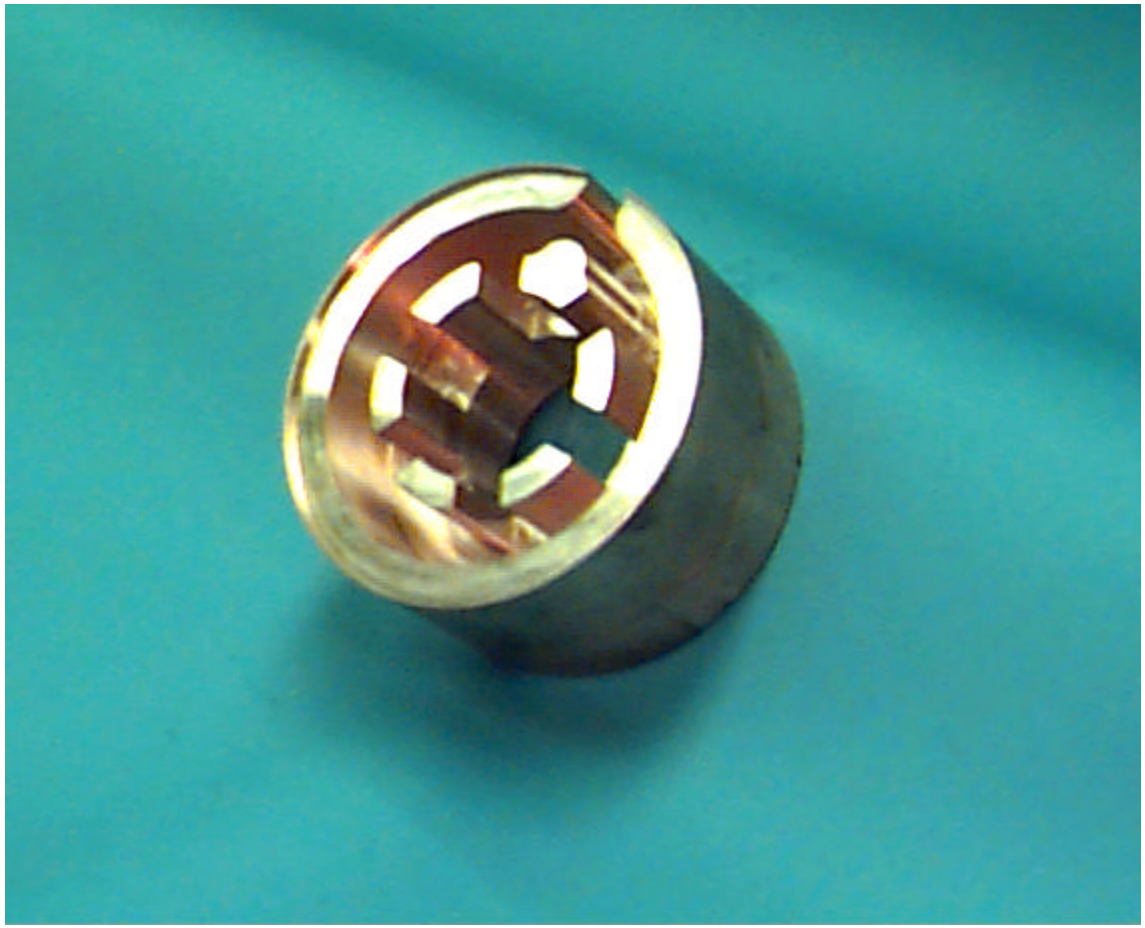

Cold Test Wrap Around Mode Converter at 1.5 inch diameter

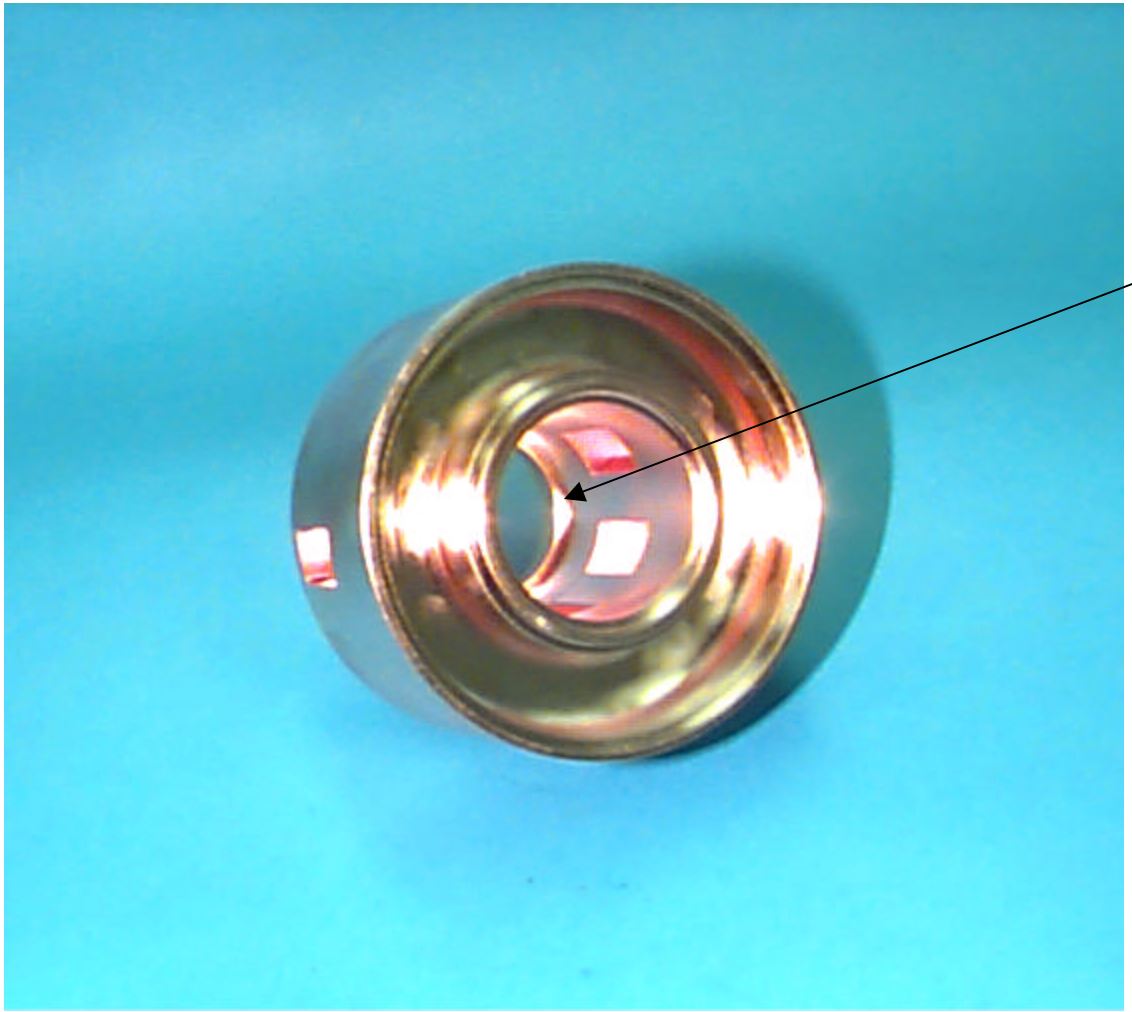

Four Load Tree

- RF Design Complete
- Mechanical Design Started
- Use Existing Loads
  - Choke design
  - 11 cells
  - Design: 200MW peak power
  - Design: 6kW average power

Assembly Model of Four Load Tree

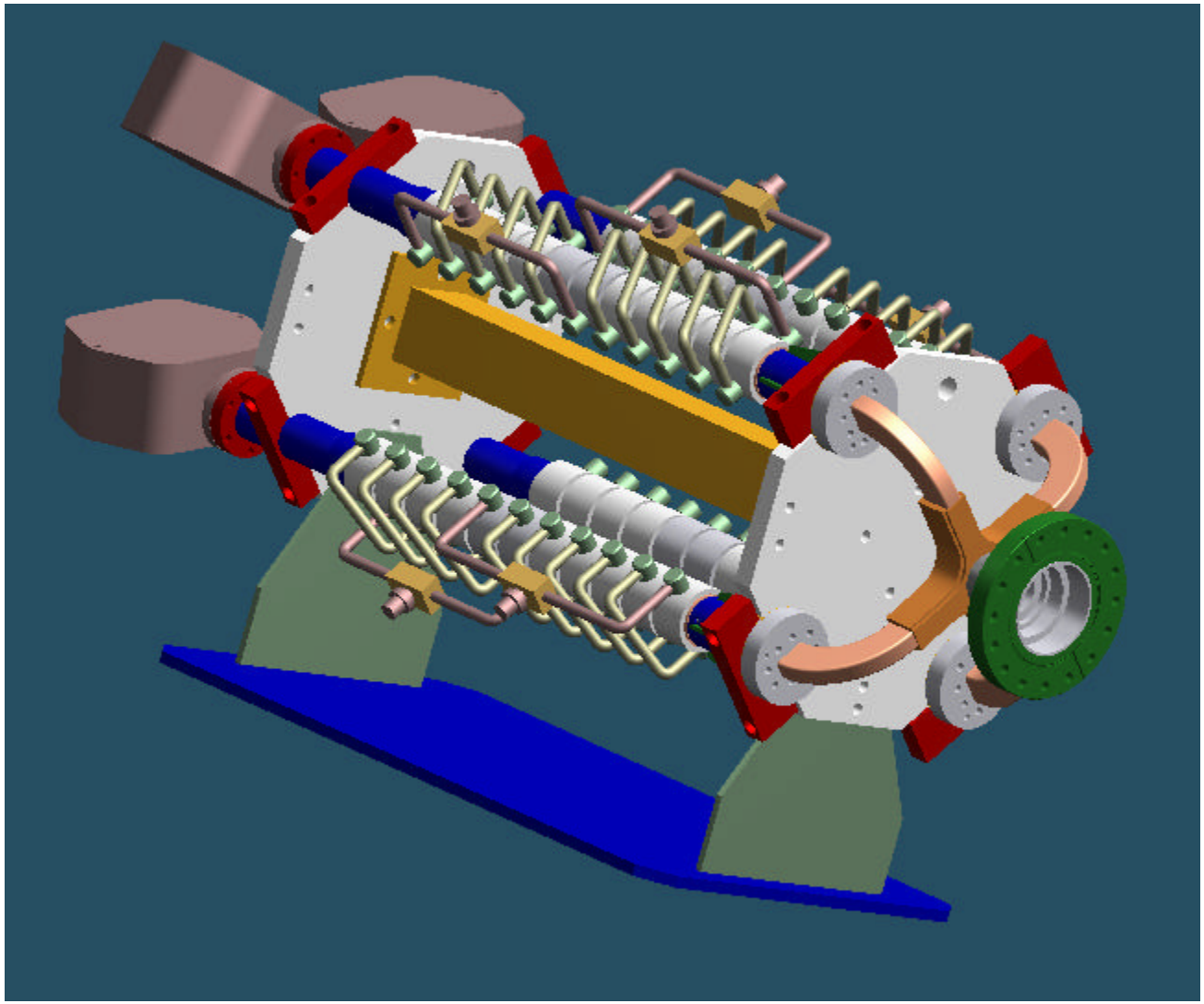

Model of Four Way Bypass

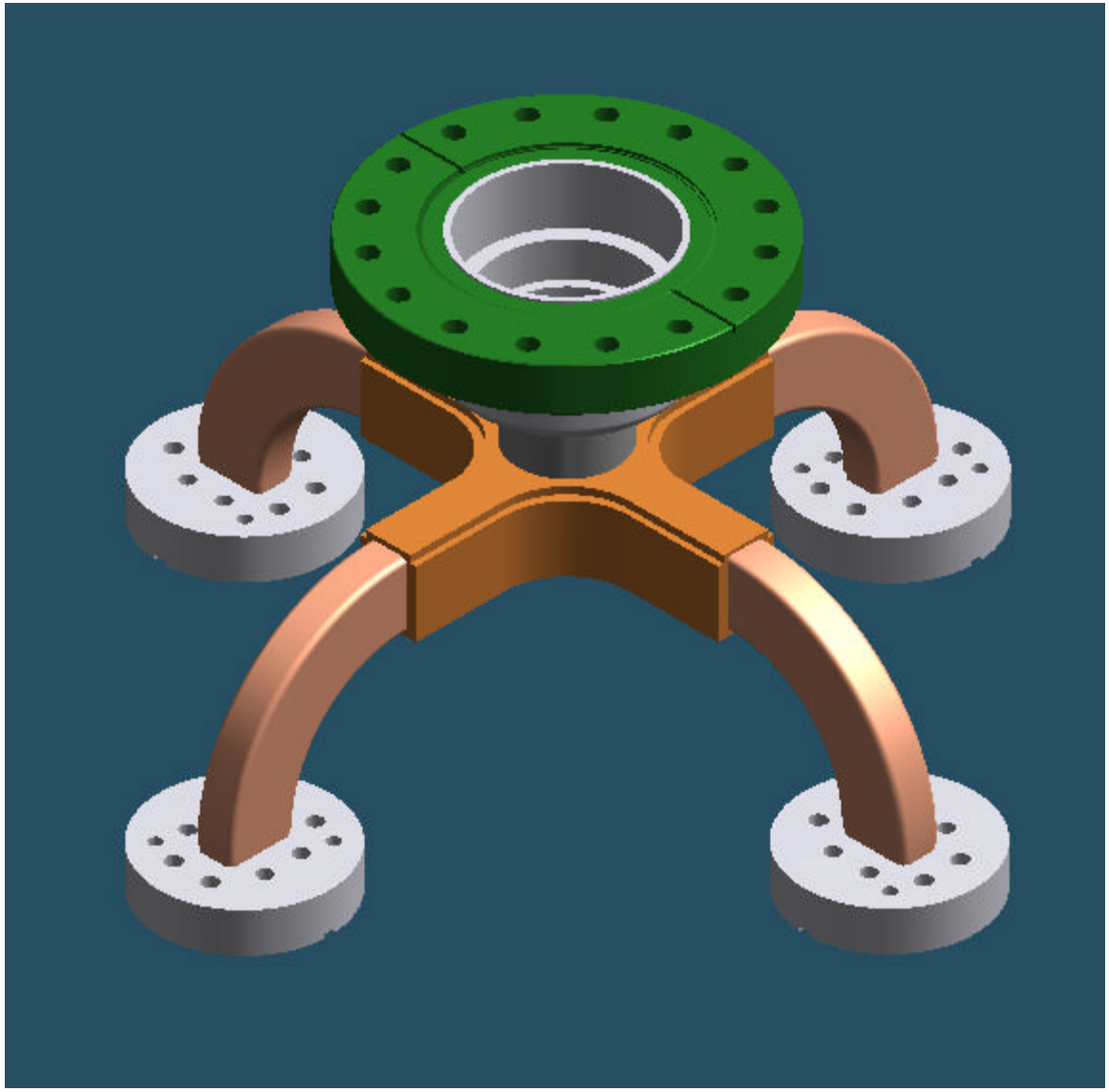

Cut Away of the Four Way Bypass

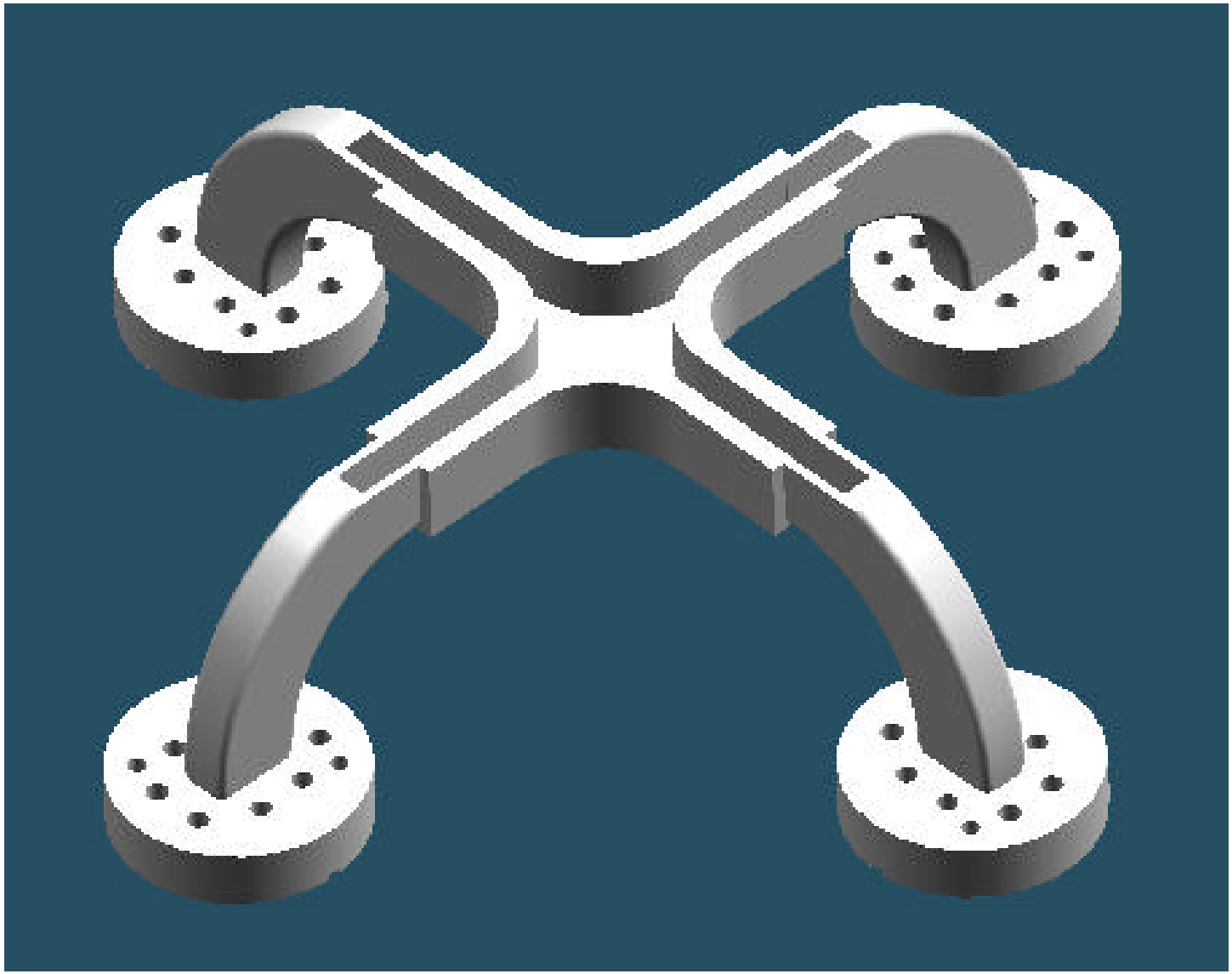

Cross Section of the Four Way Bypass

Matching Iris

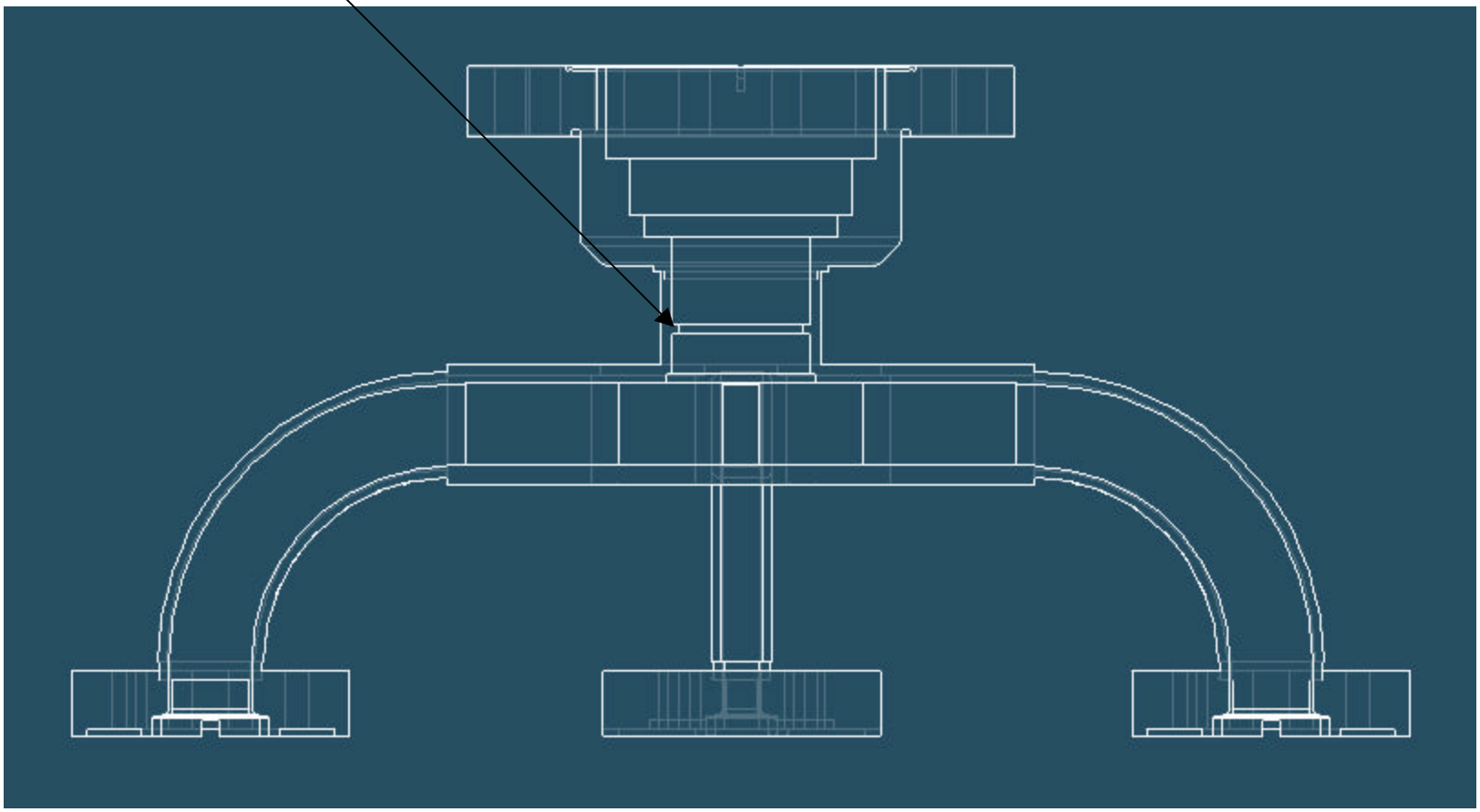

NLCTA Upgrade to 300 MW

- Combine Two 50MW Klystrons at stations
- Replace Flower Petals with Wrap Arounds
- Replace Existing bends with Square Bends
- Replace Magic tee with H-Plane Hybrid