Tests of **STACIS** for active stabilization at SLAC

Gordon Bowden, SLAC

STACIS 2000™

ACTIVE VIBRATION ISOLATION SYSTEM

Newport

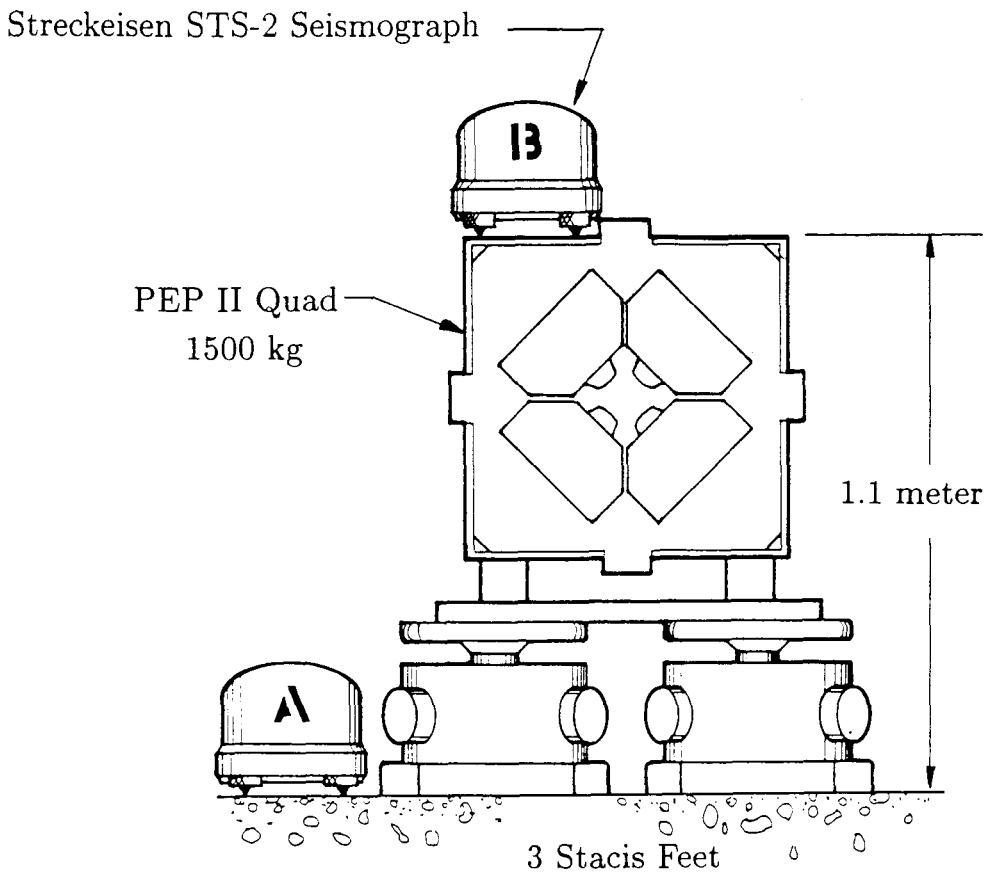
Streckeisen STS-2 Seismograph
B
PEP II Quad
1500 kg
1.1 meter
A
3 Stacis Feet

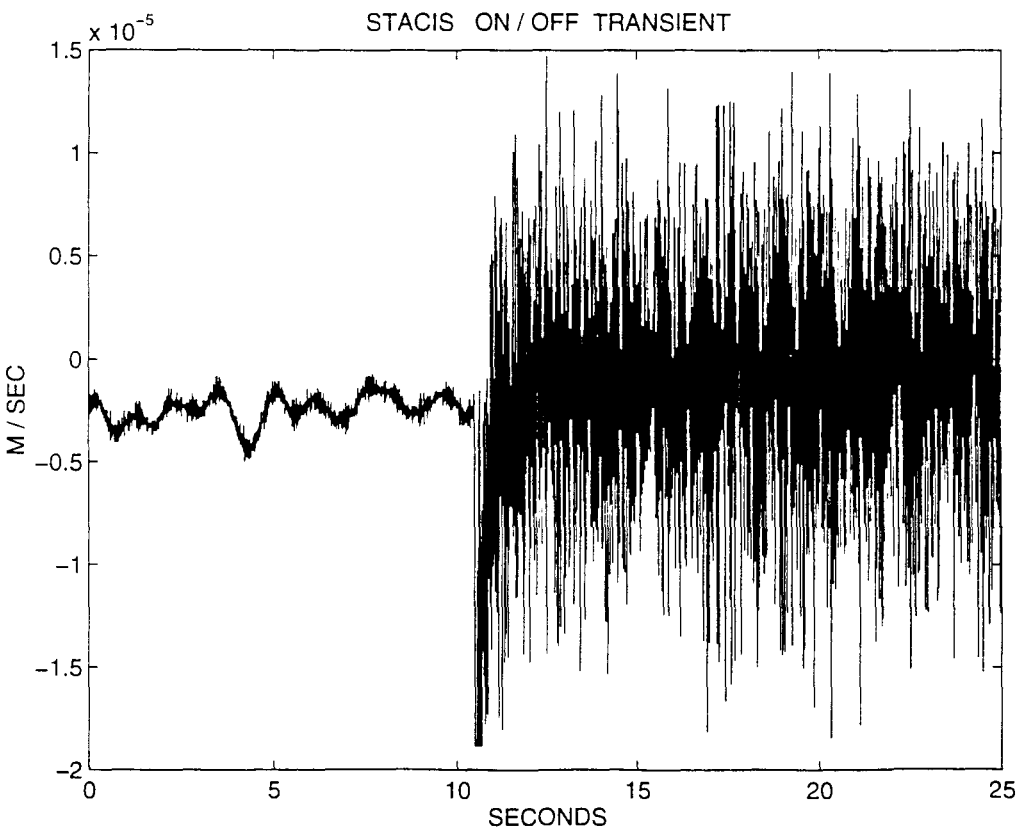
STACIS ON / OFF TRANSIENT
x 10^-5
1.5
1
0.5
0
-0.5
-1
-1.5
-2
M / SEC
0
5
10
15
20
25
SECONDS

STACIS off, Vertical Motion

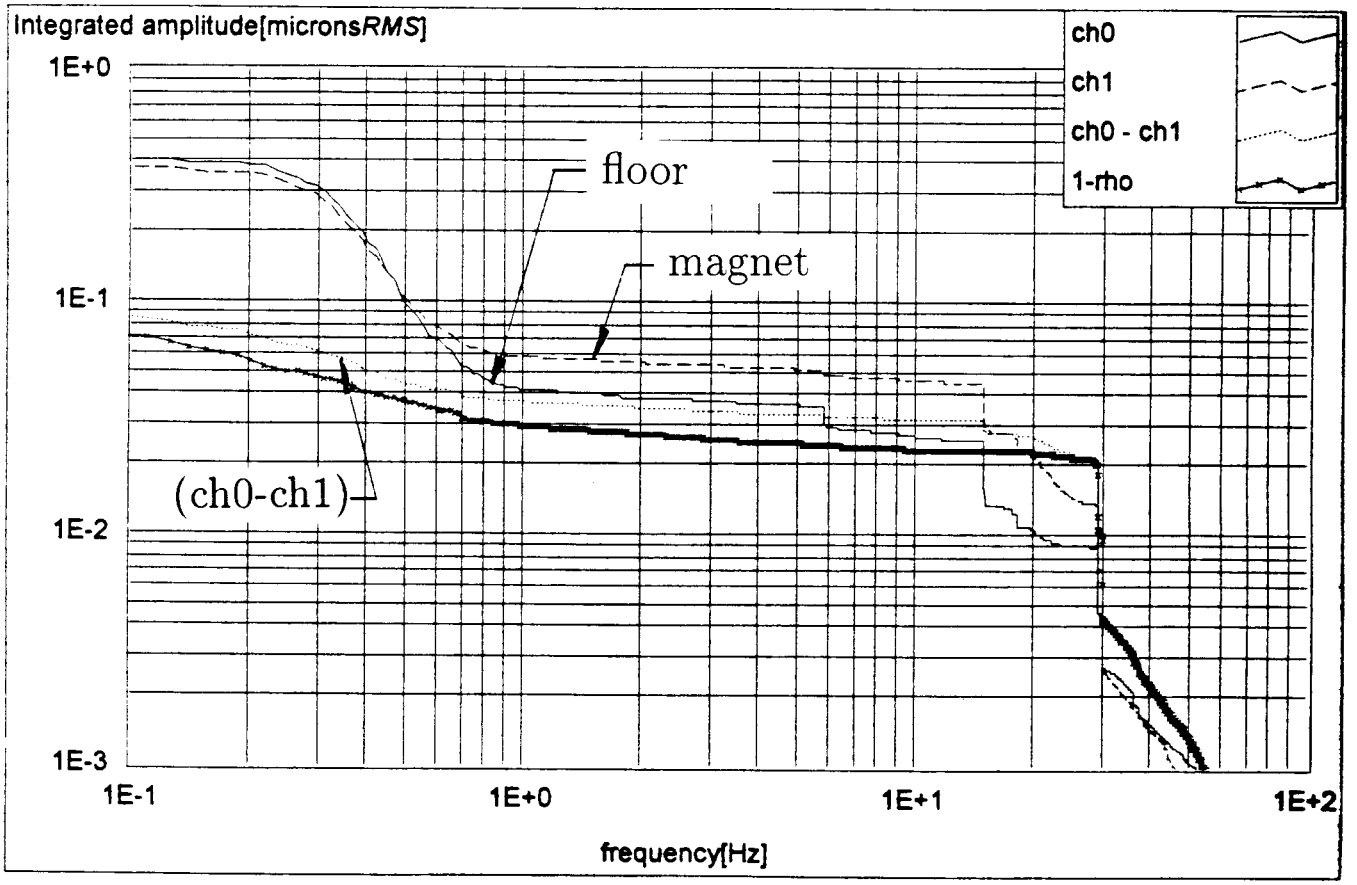

STACIS on, Vertical Motion

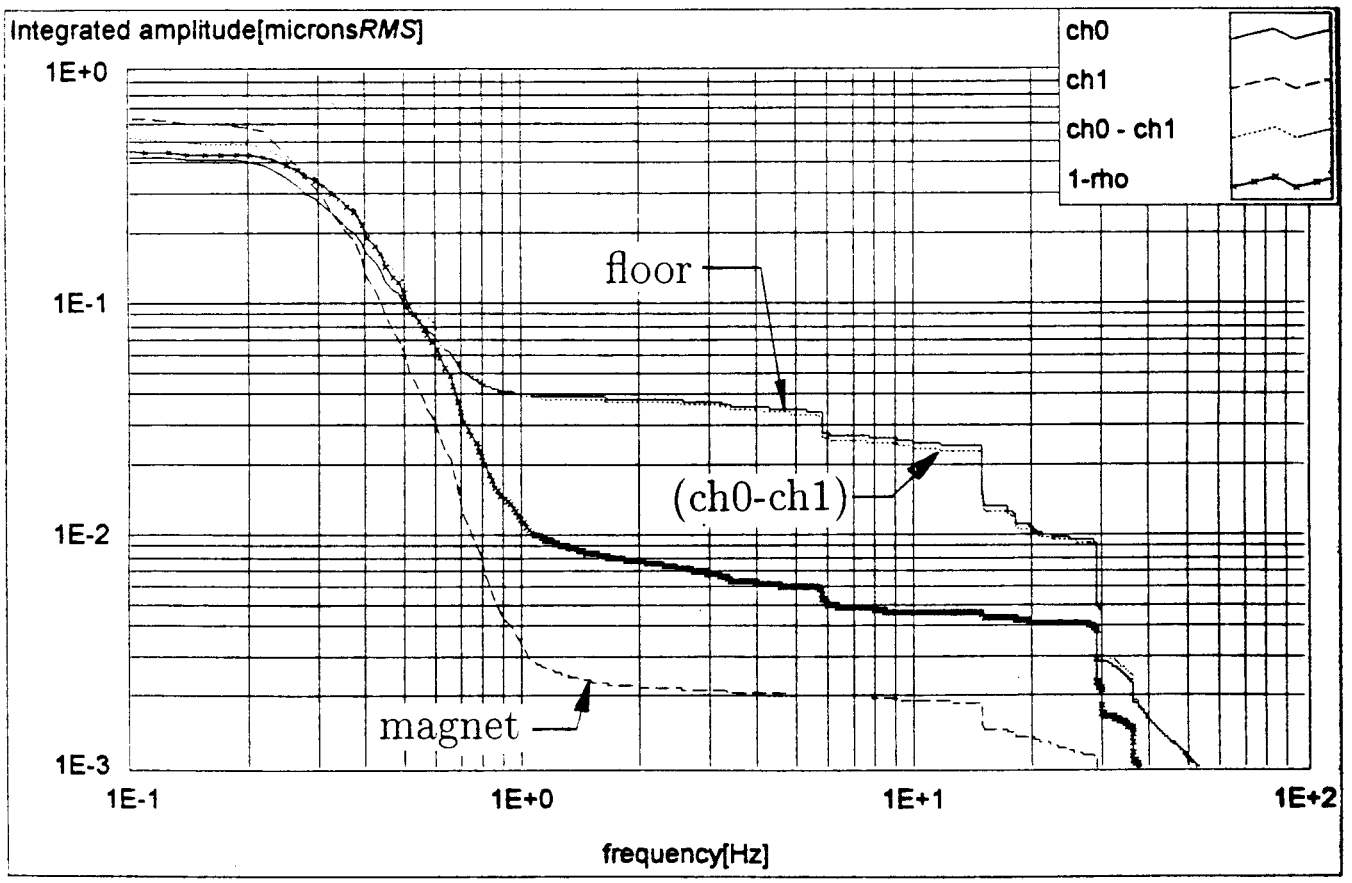

STACIS on, Horizontal Motion

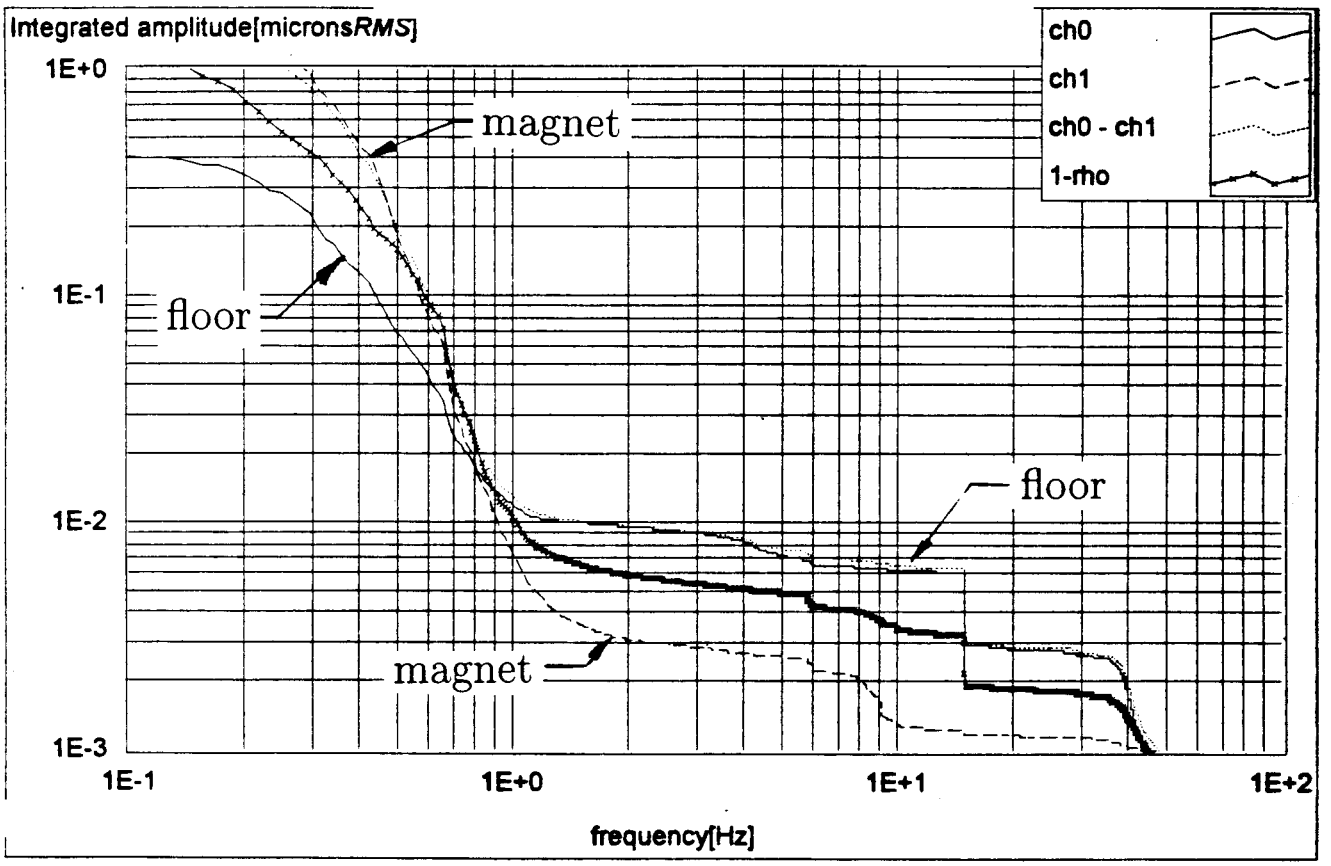

STACIS Vertical Transmission

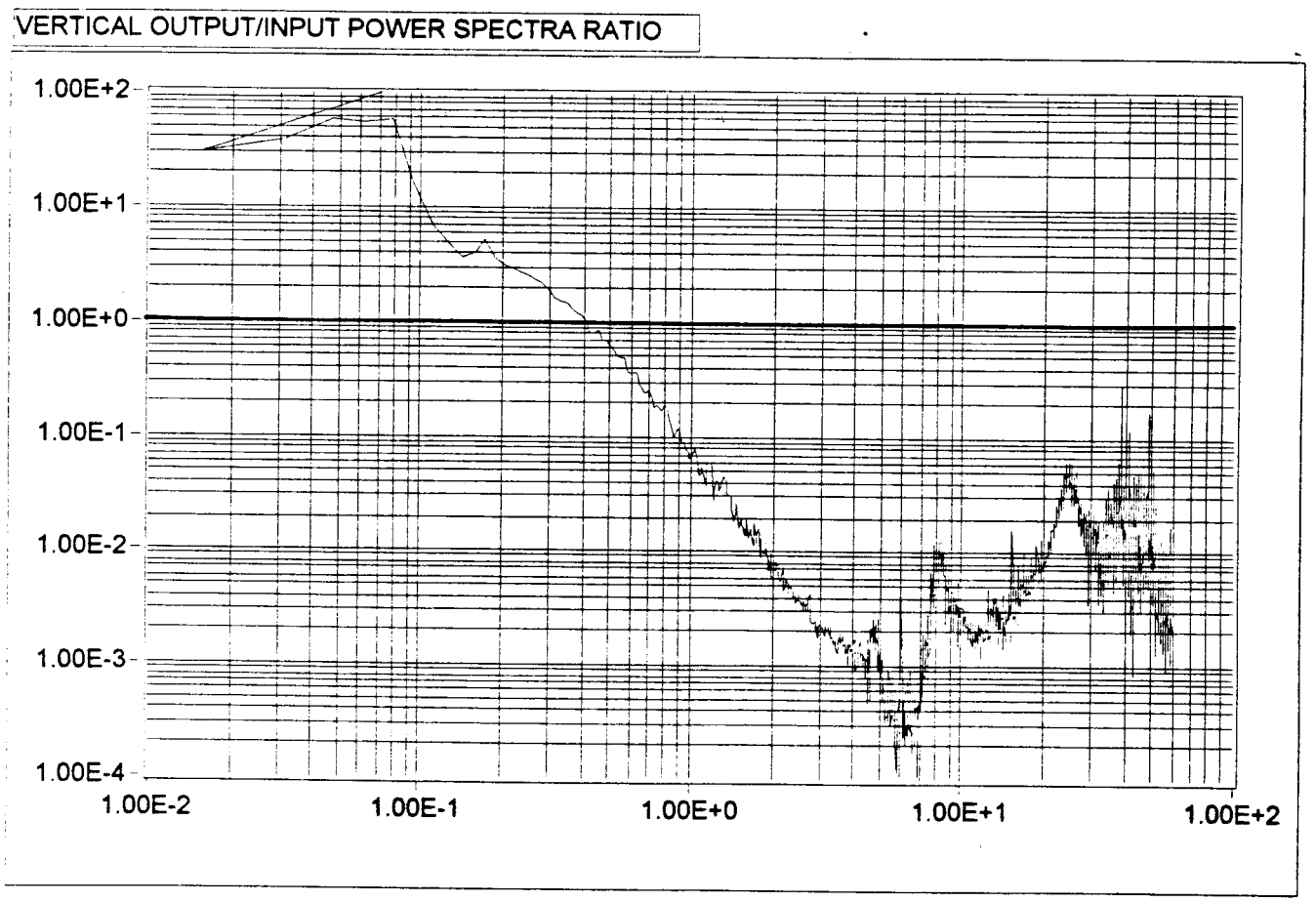

The World's Most Advanced Active Vibration Isolation Solution

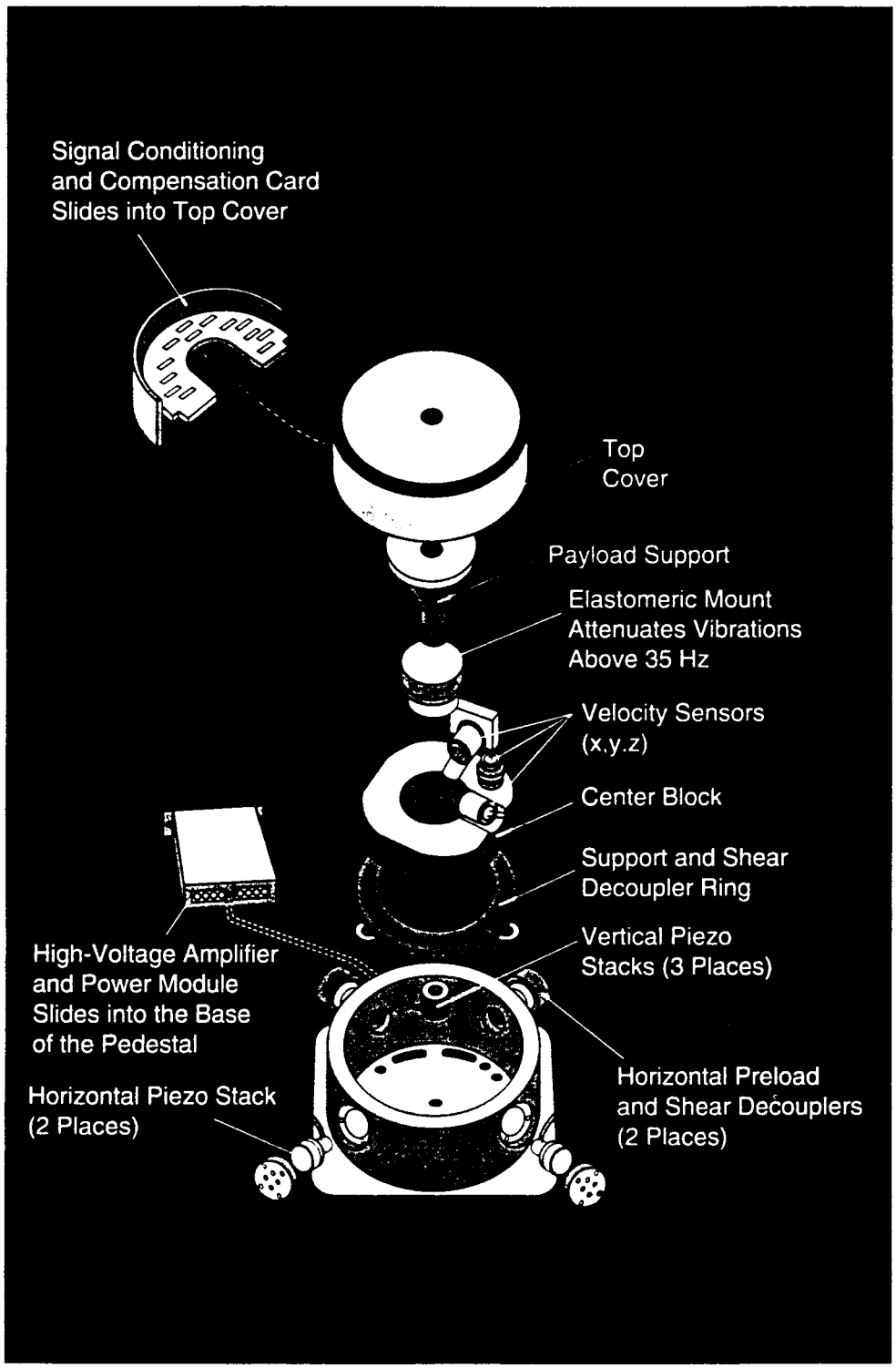

The Stacis 2000™ delivers a truly unmatched level of vibration isolation, enabling ultra-precision semiconductor fabrication equipment to deliver the highest accuracy, the fastest system throughput and the highest device yields. In applicaitons where vibration has been a problem in the past, the improved stability of the Stacis 2000 system has increased manufacturing throughput and yield by as much as 20%. The Stacis 2000 is engineered and manufactured by Barry Controls, the world leader in active vibration control technology, and is exclusively distributed by Newport Corporation in North America.

Easy Installation

Never has active isolation been this easy to install and use. Just place the isolators under your system, hook up the power and signal cables, and flip the switch. Because there's minimal calibration and initialization, you never have to wait to begin using your system. Installation is also easier because the Stacis 2000 does not require compressed air, so there are no supply and exhaust lines to install and maintain.

The Widest Active Bandwidth Available

With isolation starting at just 0.3 Hz, the Stacis 2000 offers far better protection against the low-frequency vibrations that cause the most problems for photolithography, metrology and other ultra-precision

1995

Additional Benefits

- Easy-to-use diagnostics and modular design minimize downtime.
- User-friendly software interface.
- Supports computerized data acquisition and control.
- Low magnetic field.
- Stiff isolators prevent rocking or movement from normal machine forces.
- Earthquake restraint option available.

Active degrees of freedom:	6
Active bandwidth:	0.3 to 250 Hz
Active resonant frequency:	0.2 Hz
Resonant transmissibility:	1.1
Isolation margin above 10 Hz:	>90%
Settling time (for 5 lb. @ 12 in. drop):	10 ms
Dynamic range:	60 dB
Active force output (per isolator per axis):	1000 lb. (455 kg)
Static load capacity per isolator:	400-3500 lb. (180-1591 kg)
Number of isolators per system:	3 or 4
Maximum actuator displacement:	.0016 in. (40 µm)
Isolator dimensions (W x H x O):	11.75 x 12.4 x 12.5 in. (298 x 315 x 318 mm)
Controller dimensions (W x H x O):	17.0 x 6.5 x 10.0 in. (432 x 165 x 254 mm)
Operating temp:	10 to 32°C
Storage temp:	-40 to +125°C
Operating humidity:	75% max.
Power required:	100, 120, 200, or 240 VAC, 50/60 Hz, 600 W

The system's vertical isolation performance is unexcelled over a wide frequency range.

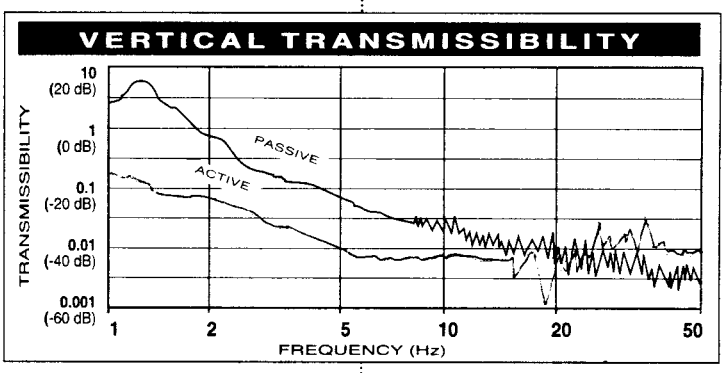

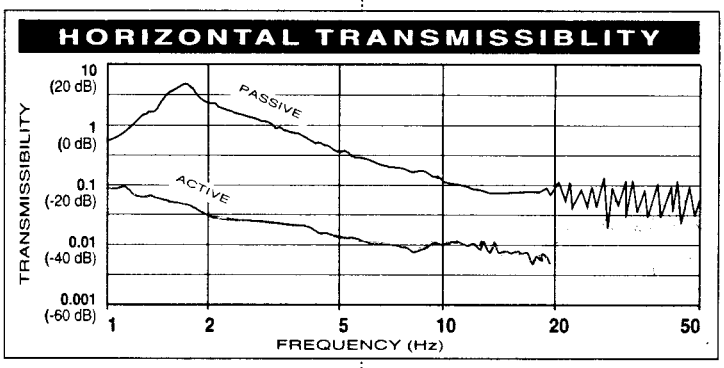

The STACIS 2000's horizontal isolation performance surpasses that of any passive isolation system by several orders of magnitude.

Ordering Information

Model	Description	U.S. List Price
2000-01	System with 3 isolators (400-1000 lb. capacity per isolator) and controller	$29,995
2000-02	System with 3 isolators (800-2000 lb. capacity per isolator) and controller	$34,995
2000-03	System with 3 isolators (1400-3500 lb. capacity per isolator) and controller	$37,995
2000-01E	System with 4 isolators (400-1000 lb. capacity per isolator) and controller	$38,990
2000-02E	System with 4 isolators (800-2000 lb. capacity per isolator) and controller	$44,990
2000-03E	System with 4 isolators (1400-3500 lb. capacity per isolator) and controller	$48,990
X2001	Additional isolator for 400-1000 lb. capacity systems	$ 8,995
X2002	Additional isolator for 800-2000 lb. capacity systems	$ 9,995
X2003	Additional isolator for 1400-3500 lb. capacity systems	$10,995

STACIS™ 2000 is designed and manufactured by Barry Controls.®
For further information contact Newport or your local Newport representative:

FM27207

***Newport Corporation*, 1791 *Deere Avenue*, *Irvine*, CA 92714, *Telephone*: 800-222-6440, 714-863-3144, *Facsimile*: 714-253-1680**

Belgium
Telephone 016-402927
Facsimile 016-402227

Canada
Telephone 905-567-0390
Facsimile 905-567-0892

France
Telephone 1-60 91 68 68
Facsimile 1-60 91 68 69

Germany
Telephone 06151-36 21-0
Facsimile 06151-36 21-50

Italy
Telephone 02-924-5518
Facsimile 02-923-2448

Japan
Telephone 03-5379-0261
Facsimile 03-5379-0155

Netherlands
Telephone 03405-92111
Facsimile 03405-70242

Switzerland
Telephone 01-740-2283
Facsimile 01-740-2503

Taiwan R.O.C.
Telephone 886-2-506 2366
Facsimile 886-2-507 9268

United Kingdom
Telephone 01635-521757
Facsimile 01635-521348

Applications

- *Steppers*
- *Electron microscopes including SEM and TEM*
- *Laser trimmers*
- *Crystal growing furnaces*
- *Mask aligners*
- *Mask inspection systems*
- *Mask and wafer repair systems*
- *Precision grinders*
- *Optical systems*

Newport®

DS-069510-D (8-95)

STACIS Design Evolution

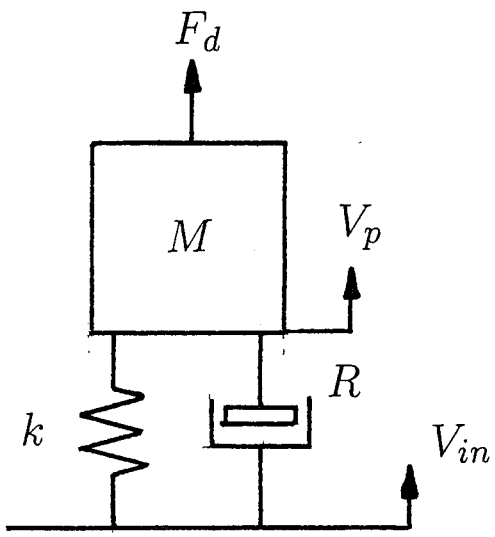

Soft Mount

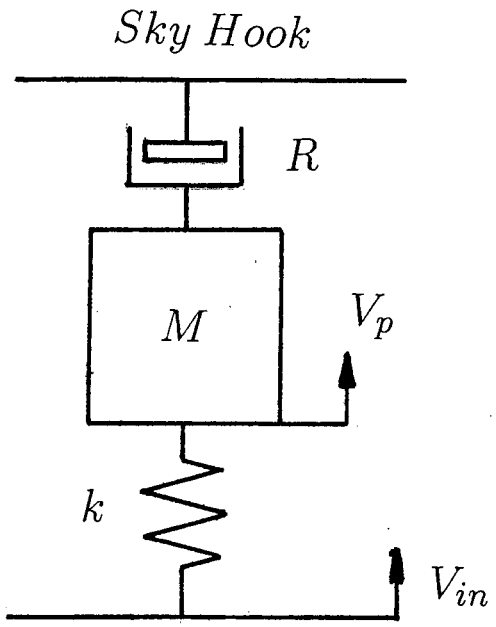

Soft Mount with 'Sky Hook'

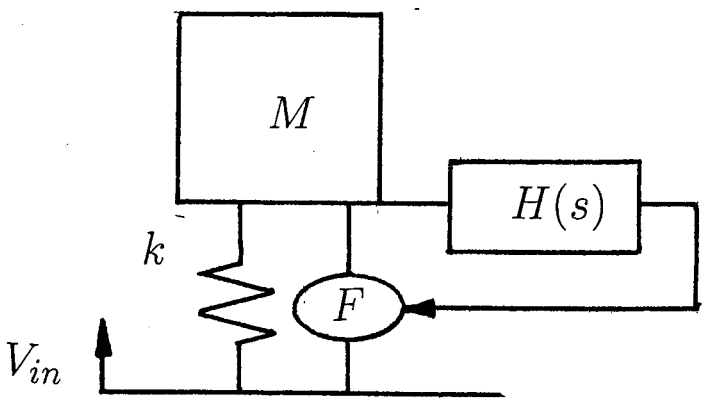

Soft Mount
Velocity Feedback

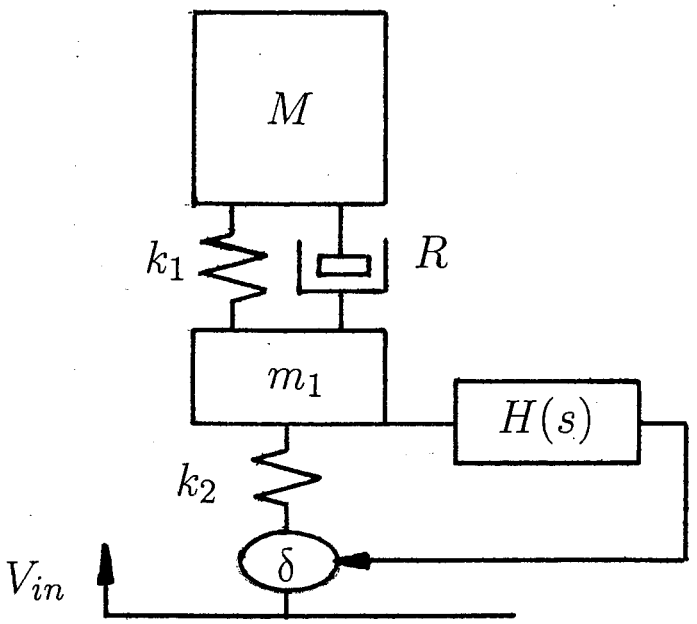

Hard Mount

Velocity Transmission V_p/V_{in}

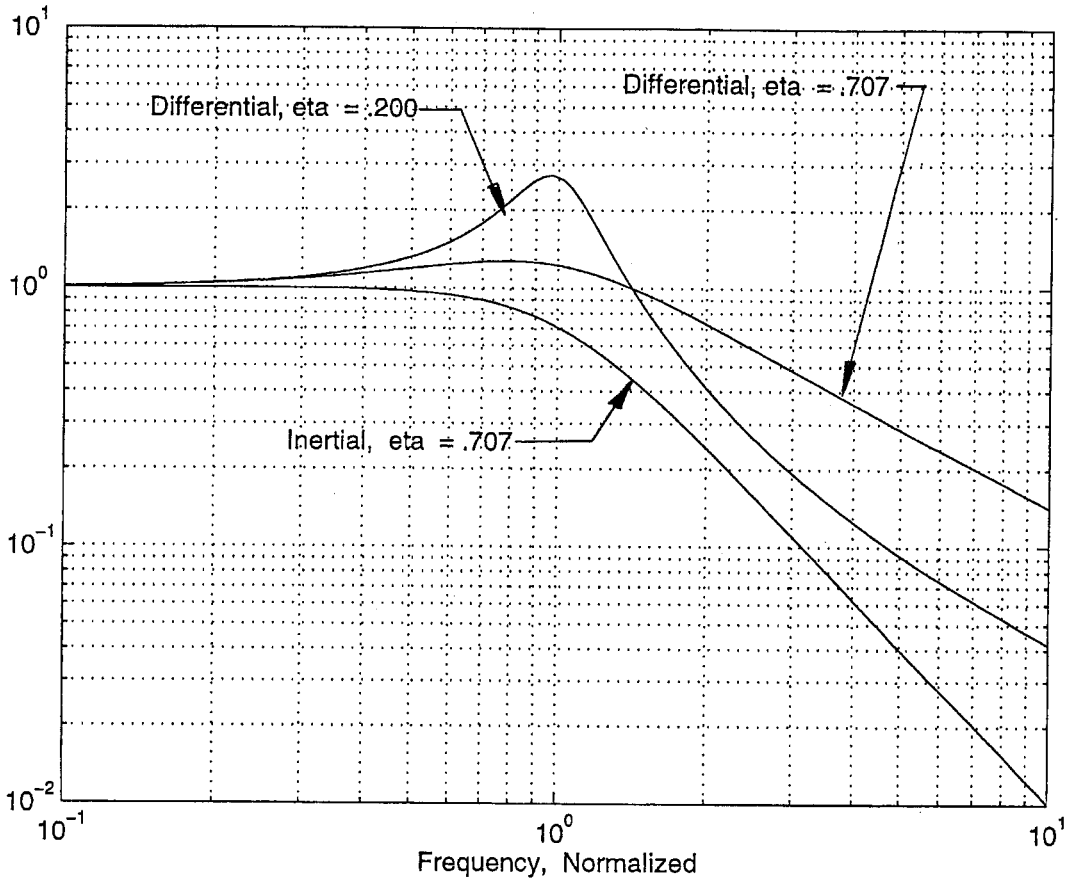

Differential Damping

$$\frac{V_p}{V_{in}} = \frac{\omega_n}{s^2 + 2\zeta\omega_n s + \omega^2}$$

Inertial Damping

$$\frac{V_p}{V_{in}} = \frac{2\zeta\omega_n s + \omega_n^2}{s^2 + 2\zeta\omega_n s + \omega_n^2}$$

Why is active μseismic control a challenge?

- Plant is not a point mass - 6 degrees of freedom.
- Plant is not a rigid body - internal modes
- Plant not separated from enviornment - floor modes
- Hard to close-couple sensor-actuator pairs.

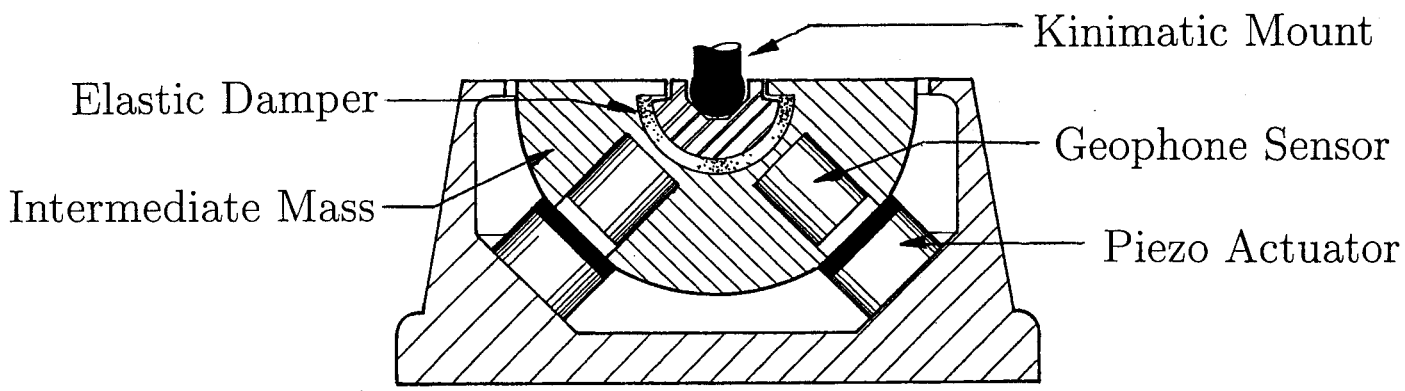

- Microseismic signal/noise ratio is small

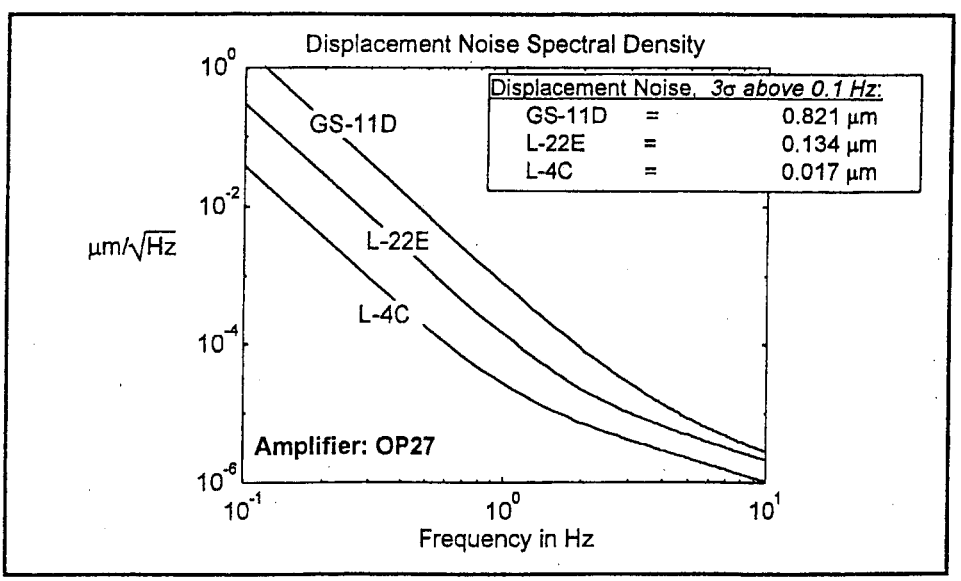

Figure 4: Displacement noise spectral densities of three geophones conditioned with an OP27 amplifier. The geophone resonance is the most influential parameter on the low frequency noise.

Elite™ 3

Active Isolation Modules and Control System

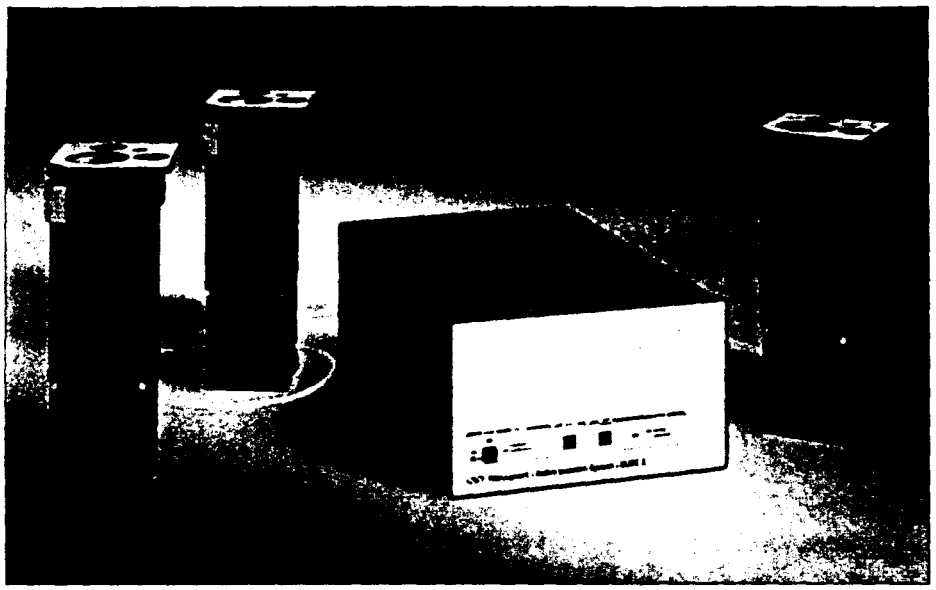

Newport's **Elite™ 3 Series Active Isolators** provide a digitally controlled ultrastable platform support. Elite™ 3 technology is engineered specifically for very high resolution wafer production, metrology and microscopy applications. Piezoelectric actuators are designed into the isolator to support stiff work surfaces and actively cancel low frequency floor vibrations.

An optional kinematic docking system horizontally stabilizes equipment platforms during wafer transfer or other payload motion. Elite™ 3 technology can be customized for integration into OEM systems. Elite™3—focus on the future.

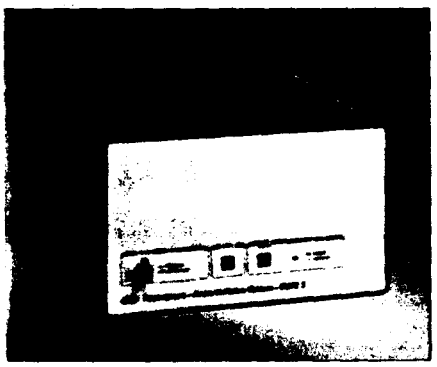

Active Isolation Controller

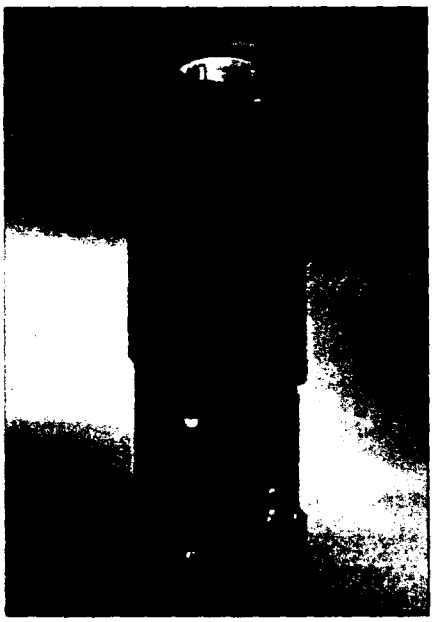

Active Isolation Module

NEW FROM NEWPORT

Key Features

- *Active vertical vibration cancellation*
- *Feedback control sensor drives piezo-actuator*
- *Pendulum decouples horizontal motion*
- *Docking locks equipment platforms during load movement and parts exchange*
- *Available for OEM integration*

Specifications

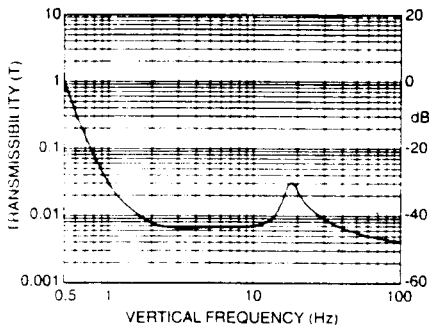

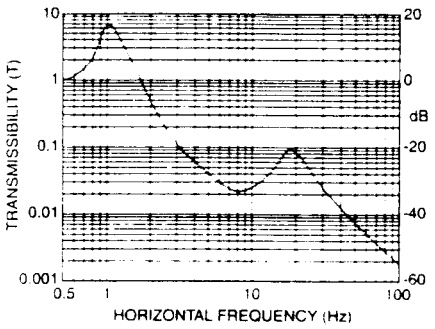

Performance Specification		
Active Degrees of Freedom	3	
Number of Isolators	3 or 4	
Maximum Load		
Per Isolator	250 lb (110 kg)	500 lb (220 kg)
Set of 3	750 lb (330 kg)	1500 lb (660 kg)
Set of 4	1000 lb (440 kg)	2000 lb (890 kg)
Vertical Isolation	**Active Piezoelectric Support with Elastomer Coupling**	
Active Bandwidth	.3 to 200 Hz	
Stroke, max	.001", 25 µm	
Resonant Transmissibility	−15 dB	
Isolation at	.5Hz	−10 dB
	1 Hz	−20 dB
	10 Hz	−35 dB
	100 Hz	−35 dB
Horizontal Isolation	**Pendulum with Oil damping**	
Free Travel	.125"	
Resonant Frequency	1 Hz	
Resonant Transmissibility	15 dB	
Isolation at	.5 Hz	10 dB
	1 Hz	15 dB
	10 Hz	−30 dB
	50 Hz	−40 dB

NLC IP Enviornment

- High magnetic fields - Capacitive Sensors.
- Cryogenic Temperatures - Piezo or magnitostrictive actuators
- Noise sources internal to detector - Coolants
- Complex Detector structural dynamics
- Stabilization of feedback 'hunting'

Final academic question: Does active stabilization really remove motion? or only down shift it in frequency? Does it cool?