NLC - The Next Linear Collider Project

Damping rings wiggler and RF cavity

John Corlett

Accelerator and Fusion Research Division

LBNL

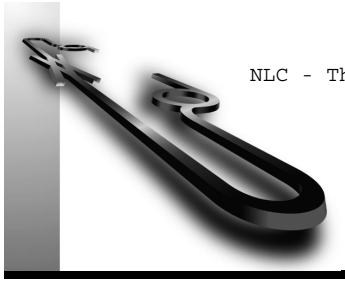

Collaborators

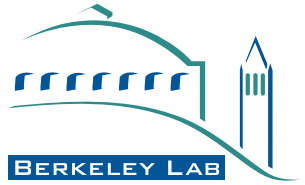

- John Corlett
- Mark Franks (LLNL)
- Neal Hartman
- Keith Jobe (SLAC)
- Kurt Kennedy
- Gary Koehler
- Mike Leung
- Derun Li
- Dave Lozano
- Steve Marks
- Joseph Rasson
- Bob Rimmer
- Marc Ross (SLAC)

NLC Damping Rings Complex

- Reduce emittance of low-energy e^+ e^-
- Stable platform for injection into linacs

	Pre-damping ring	Main damping rings
Energy (GeV)	1.9 – 2.1	1.9 – 2.1
Circumference (m)	214	297
Bunch spacing (ns)	2.8	2.8
Fill pattern	2 trains 95 bunches 2 gaps 100 ns	3 trains 95 bunches 3 gaps 68 ns
Damping time (ms)	< 5.21	< 5.21
N_{max}/bunch	1.9×10^{10}	1.6×10^{10}
Current (mA)	800	750
Injected emittance X/Y (m-rad)	$< 9 \times 10^{-2}$ (edge)	$< 150 \times 10^{-6}$ (rms)
Extracted emittance X/Y (m-rad)	$< 1 \times 10^{-4}$	$< 3 \times 10^{-6}$ / 0.03×10^{-6}
RF voltage (MV)	2	1.5
Momentum compaction	0.0051	0.00066
Energy spread (%)	0.09	0.09
Bunch length (mm)	8.4	3.8
Wiggler field (T)	2	2
Synch. radiation power per section (kW)	25	25
Vacuum pressure (Torr)	1×10^{-9}	1×10^{-9}
Maximum rep. Rate (Hz)	120	120

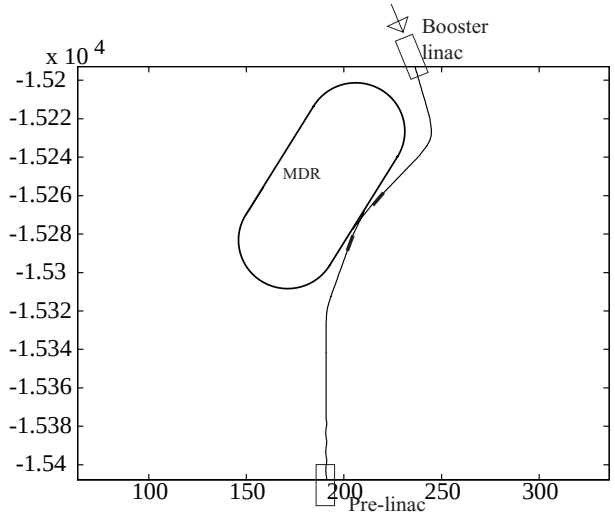

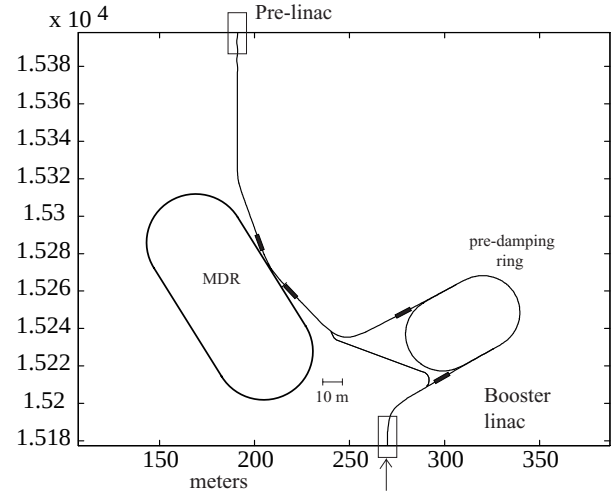

Main DR RF parameters

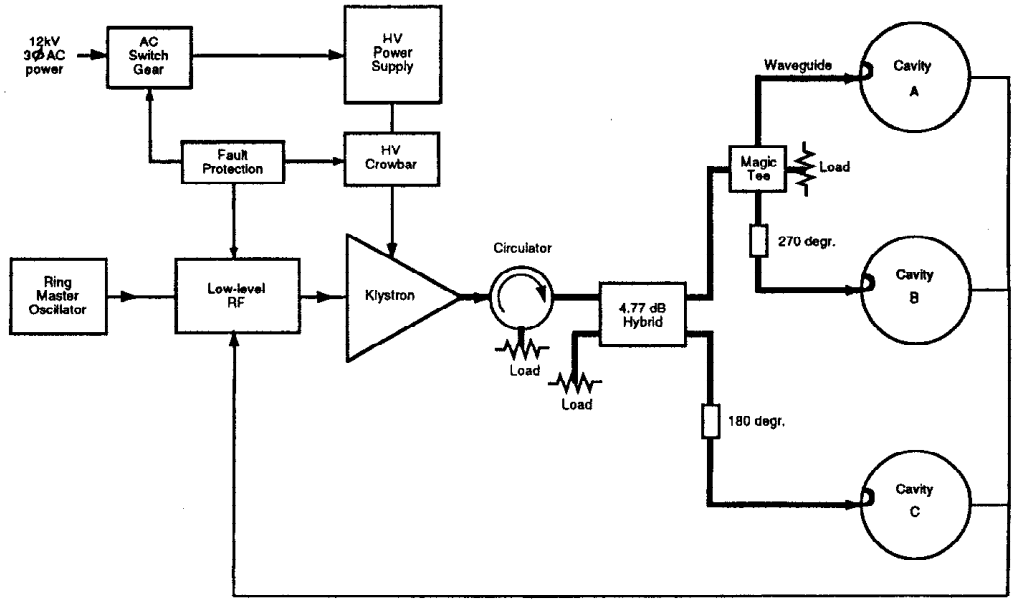

Energy	1.98 Gev
Circumference	297m
RF Frequency	714 MHz
Harmonic Number	708
Bunch spacing	2.8 ns
Beam Current	0.75 A
σ_ε	0.09 %
σ_z	4 mm
α	0.00066
$U_{s.r.}$	750 keV/turn
$U_{HOM's}$	5.6 keV/turn
$U_{parasitic}$	36 keV/turn
V_{RF}	1.5 MV
Number of Cavities	3
Number of klystrons	1
Cavity Wall Dissipation	42 kW/cavity
Klystron Power	1 MW
Shunt Impedance	3.0 MΩ/cavity
Unloaded Q	25500
Coupling Factor	5.8
Synchronous Phase Angle	32°
Optimum Detuning at Full Current	106 kHz
Synchrotron Frequency	6.9 kHz
Loaded Q	3777
Energy acceptance	± 1.8 %

HOM-damped cavity

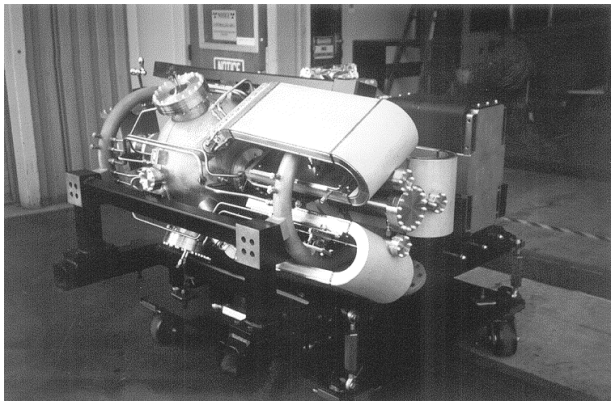

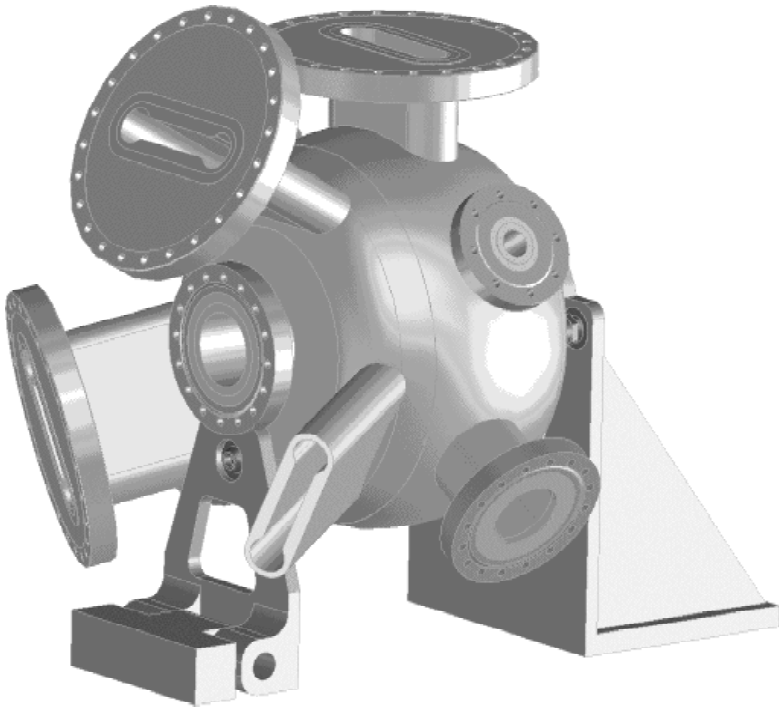

- Based on PEP-II design
  - Three damping waveguides
  - Modified cavity cross-section
  - Improved waveguide coupling apertures
  - Improved fabrication techniques
  - Large bore (33mm radius) beampipe between cavities
    - Tapers to 16mm radius at ends of cavity sections

Cavity bore

- Shunt impedance is slow function of bore radius
- Transverse loss factor more sensitive
- Tapers add considerable transverse loss

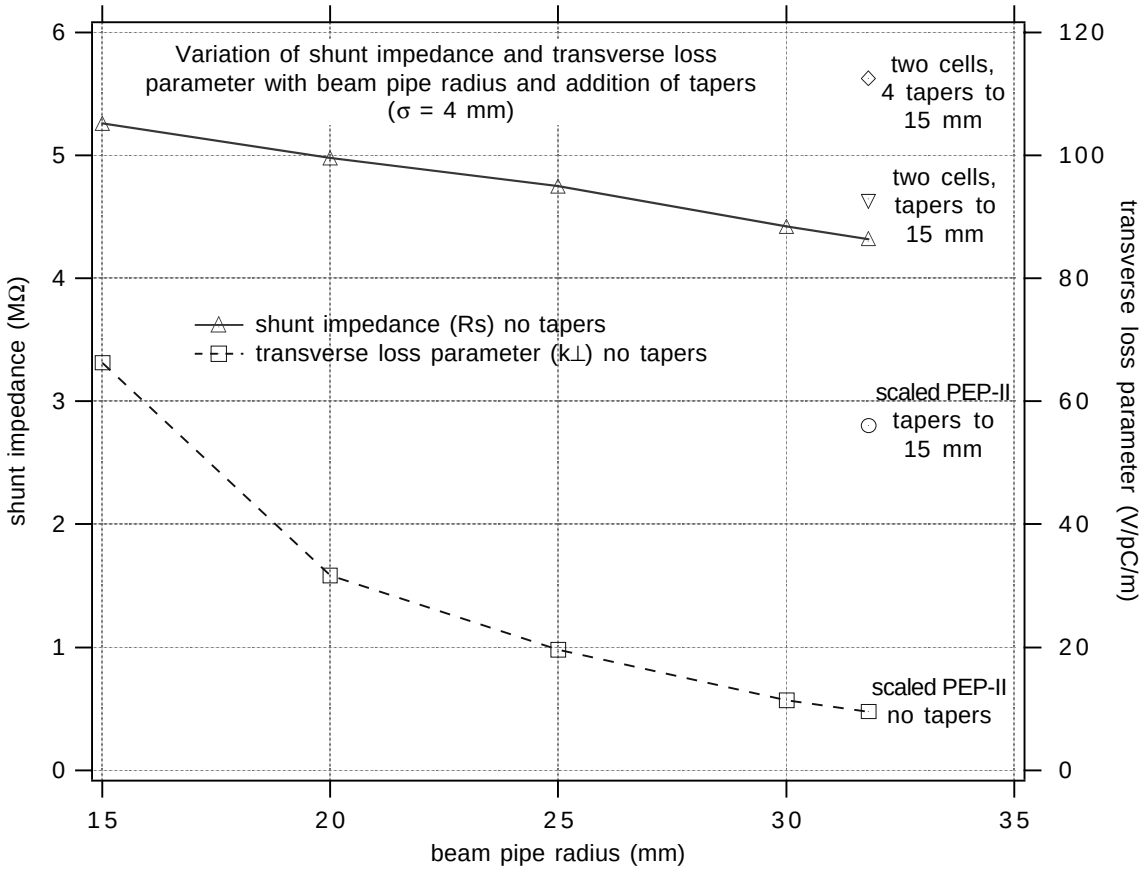

Cavity RF design

BERKELEY LAB

¥ Scaled PEP-II

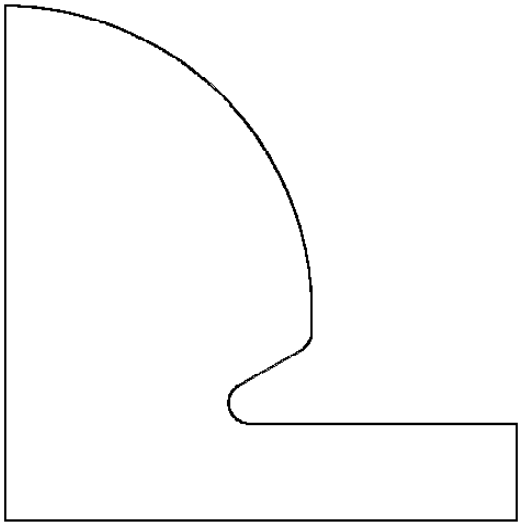

f_o (2d)=714 MHz
R/Q (2D)=116.7
Q_o (calc)=36984
Q_o (est)=25889 (70%)
R_s (calc)=4.32
R_s (est)=3.02 (70%)
$V_{operating}$=500 kV
P (est)=41.3

Spherical mid-section

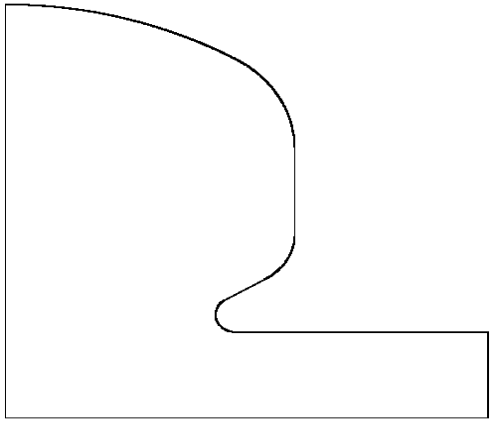

f_o (2d)=714 MHz
R/Q (2D)=118
Q_o (calc)=36182
Q_o (est)=25327 (70%)
R_s (calc)=4.27 MΩ
R_s (est)=3.0 MΩ (70%)
$V_{operating}$=500 kV
P (est)=41.7 kW

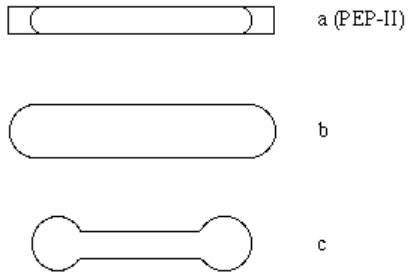

HOM damping

¥ Longitudinal

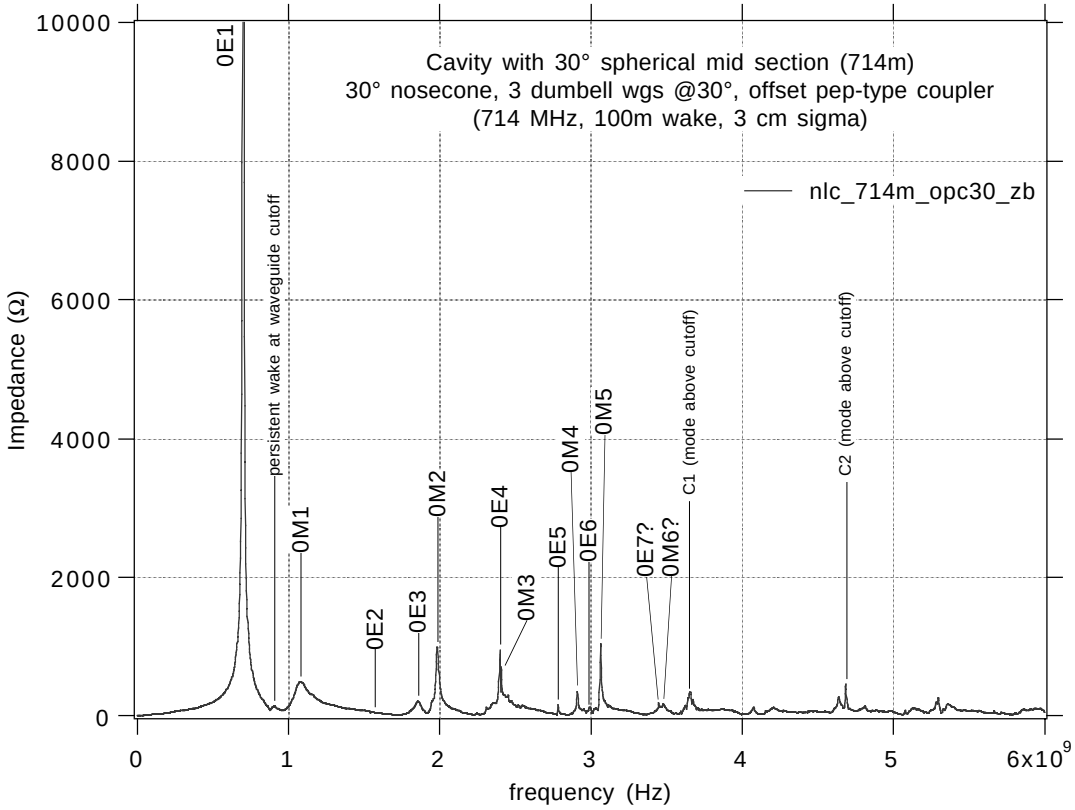

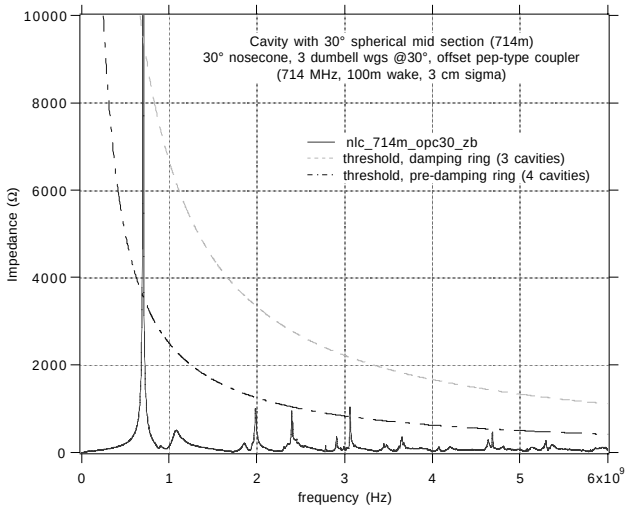

HOM damping

¥ Transverse

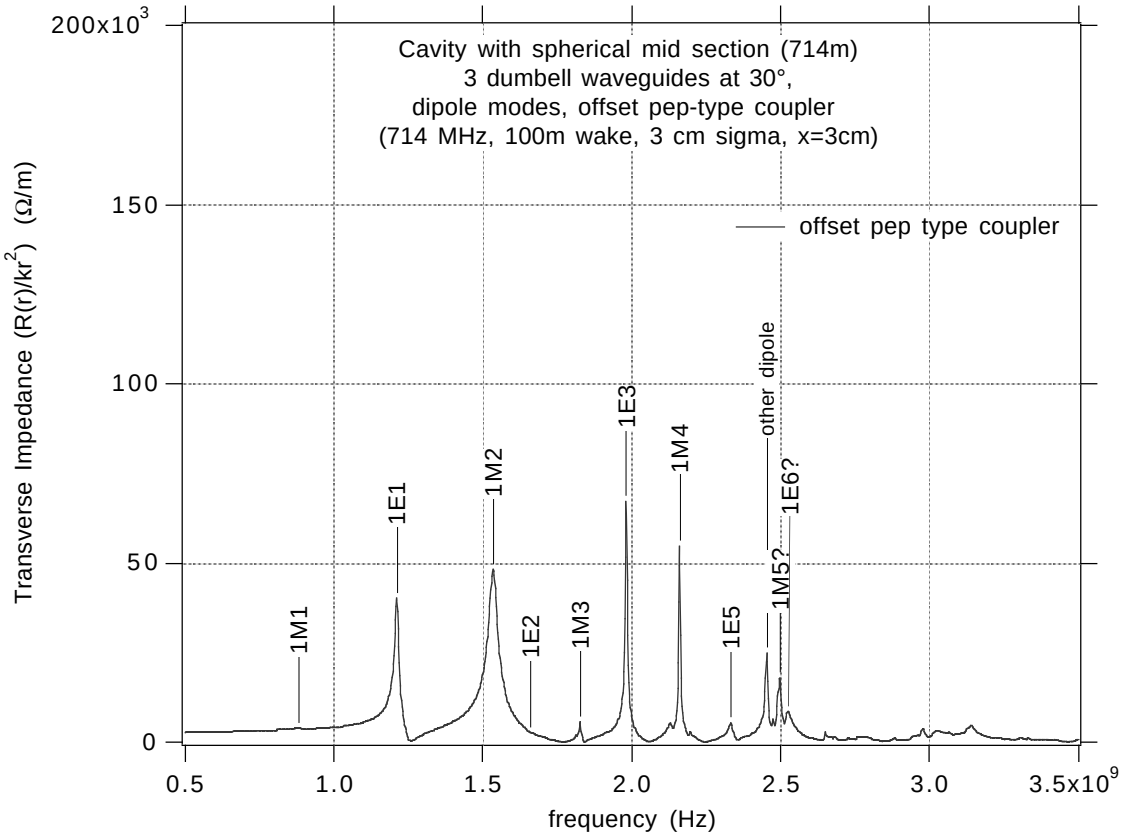

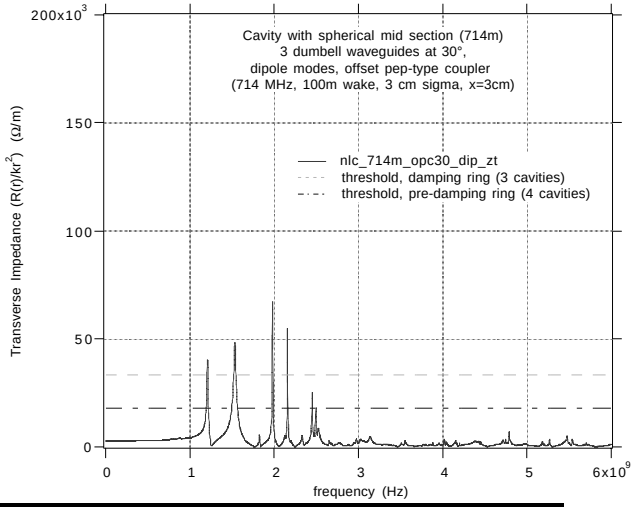

Fabrication

- Cavity in two parts
  - Machined from two forgings
  - HOM damping waveguides in lid

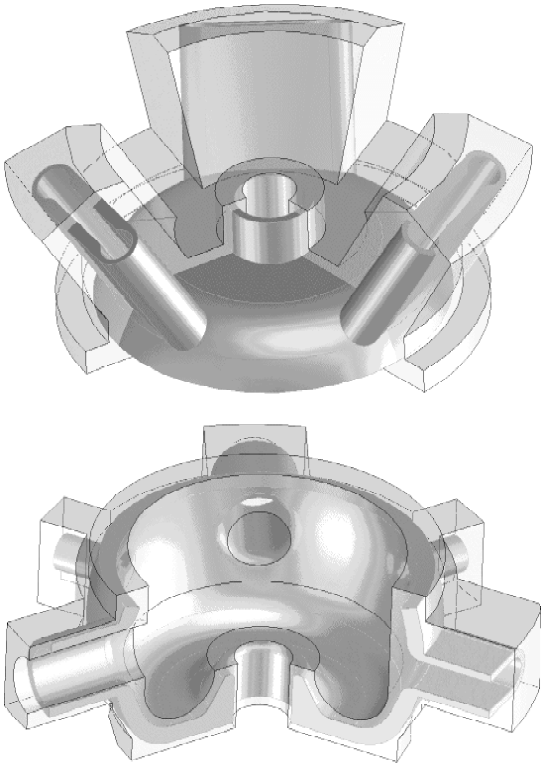

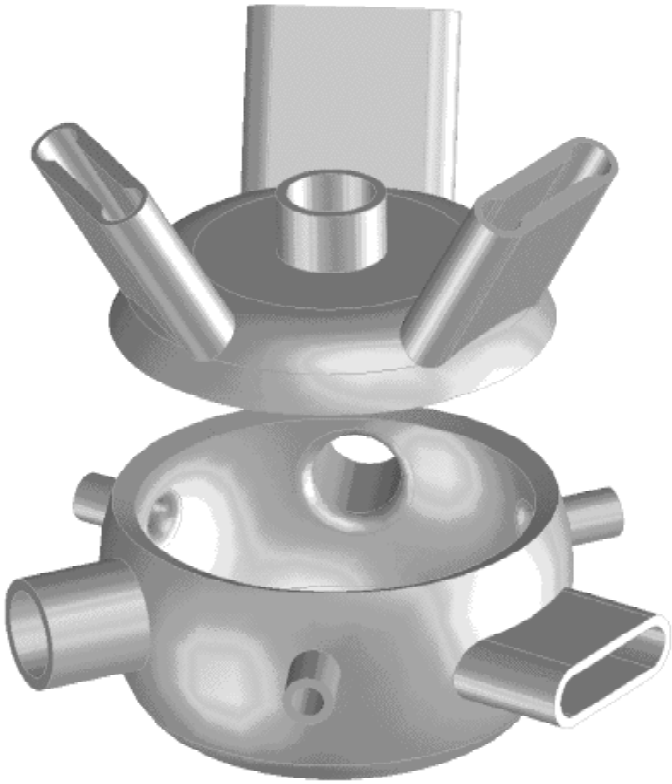

Fabrication

- Plunge EDM coupling apertures
  - Complicated merging radii
    - Less expensive than multi-axis machining

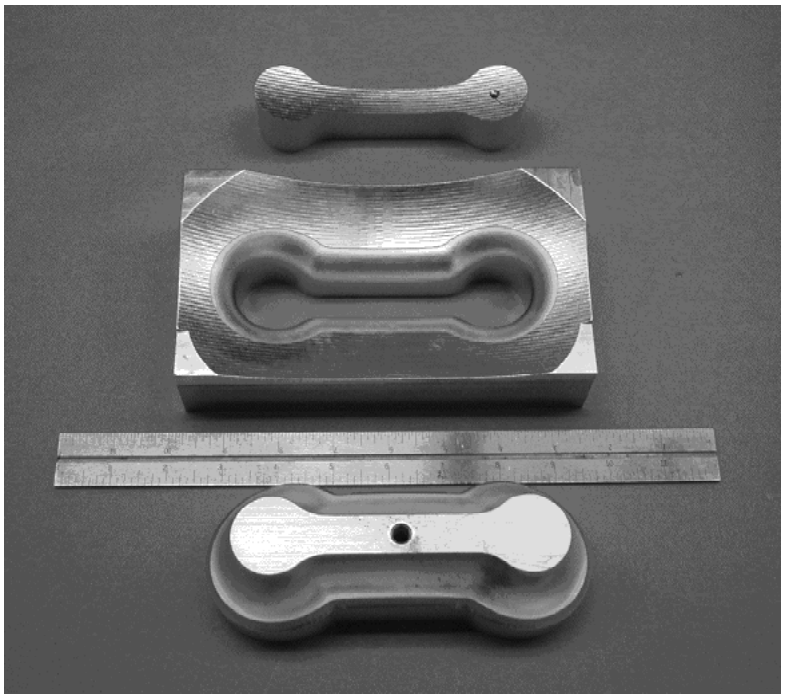

Test samples

Cooling

- Cooling channels machined into surfaces
  - —Copper plate over channels

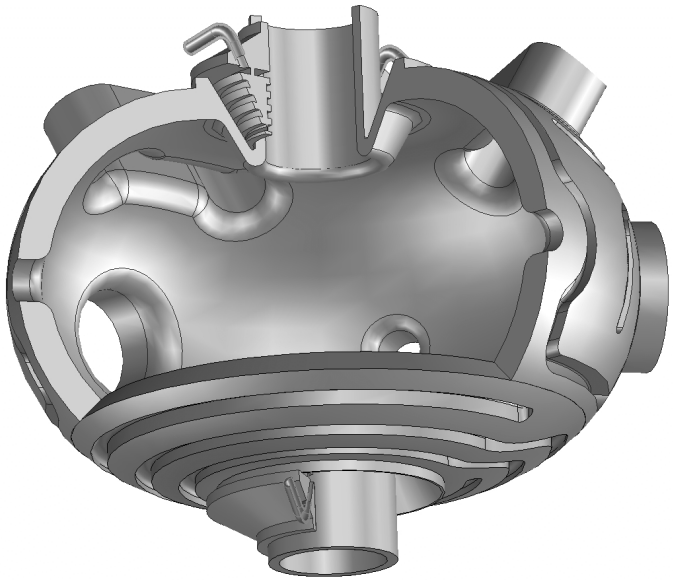

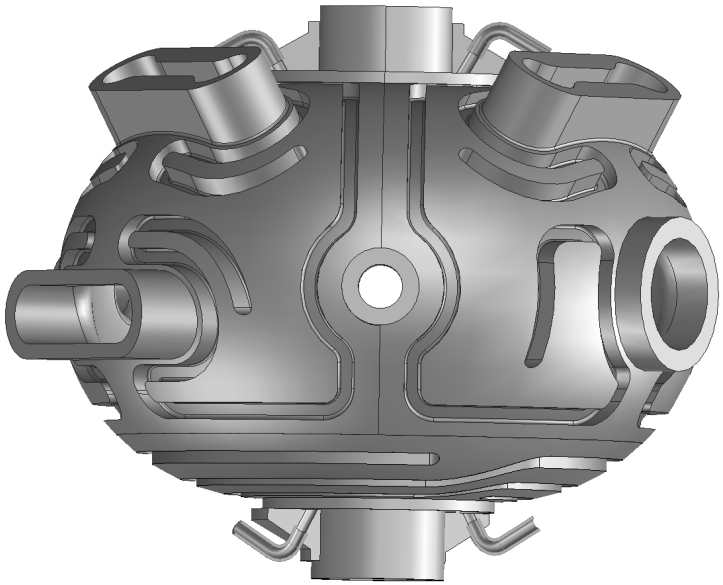

Assembly

- e-beam welding
- Cu brazed into St. St. flanges

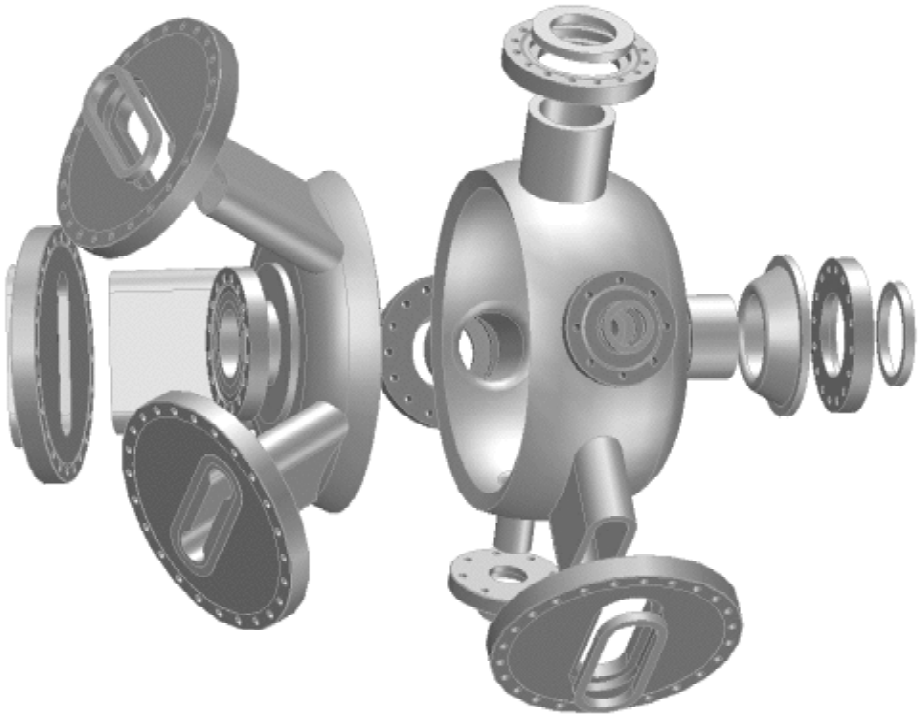

Finite element analysis

- Surface heat flux
  - — 56 Wcm^{-2} for 42 kW total
- Von Mises stress

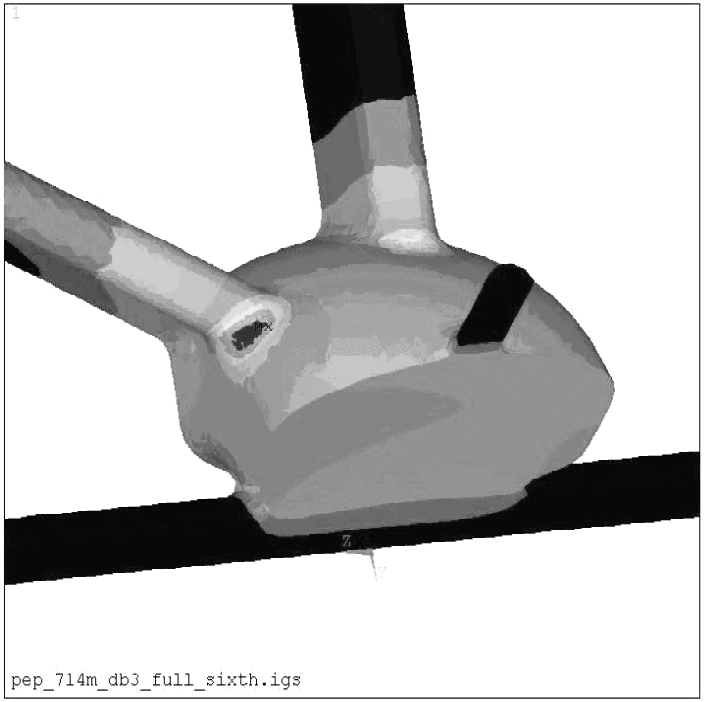

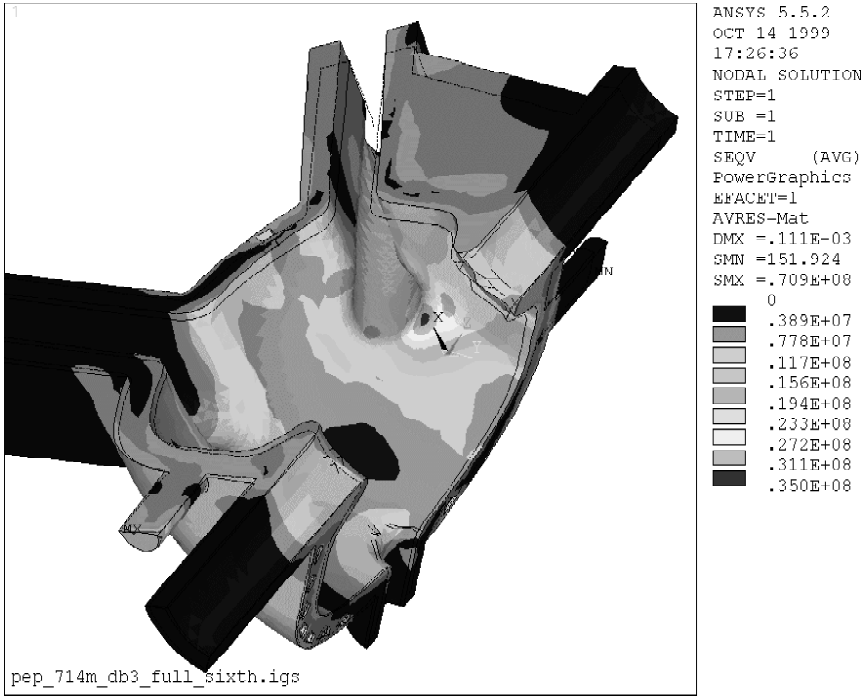

Finite element analysis

- Outside surface temperature
  - HOM port needs additional cooling
- Inside surface temperature
  - 31¡ above water temperature

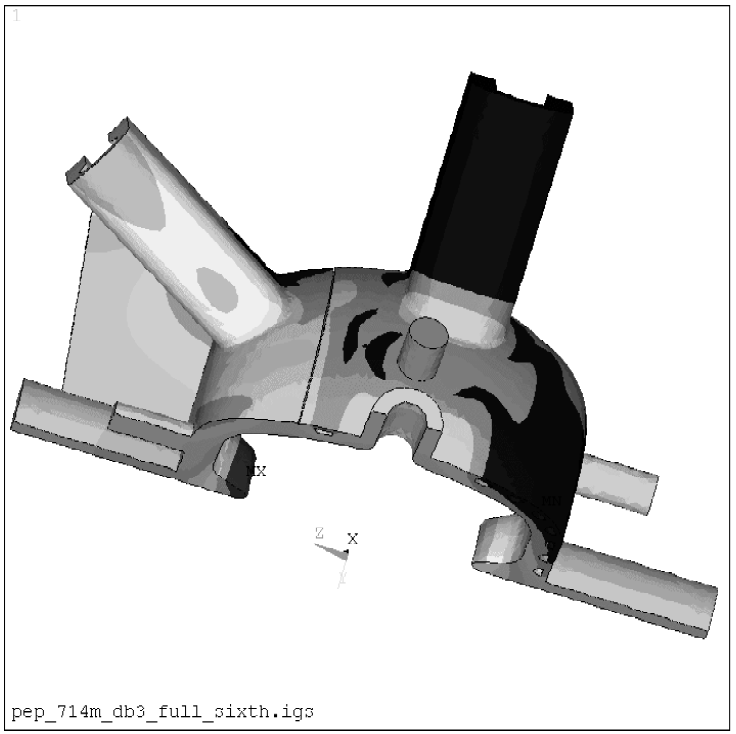

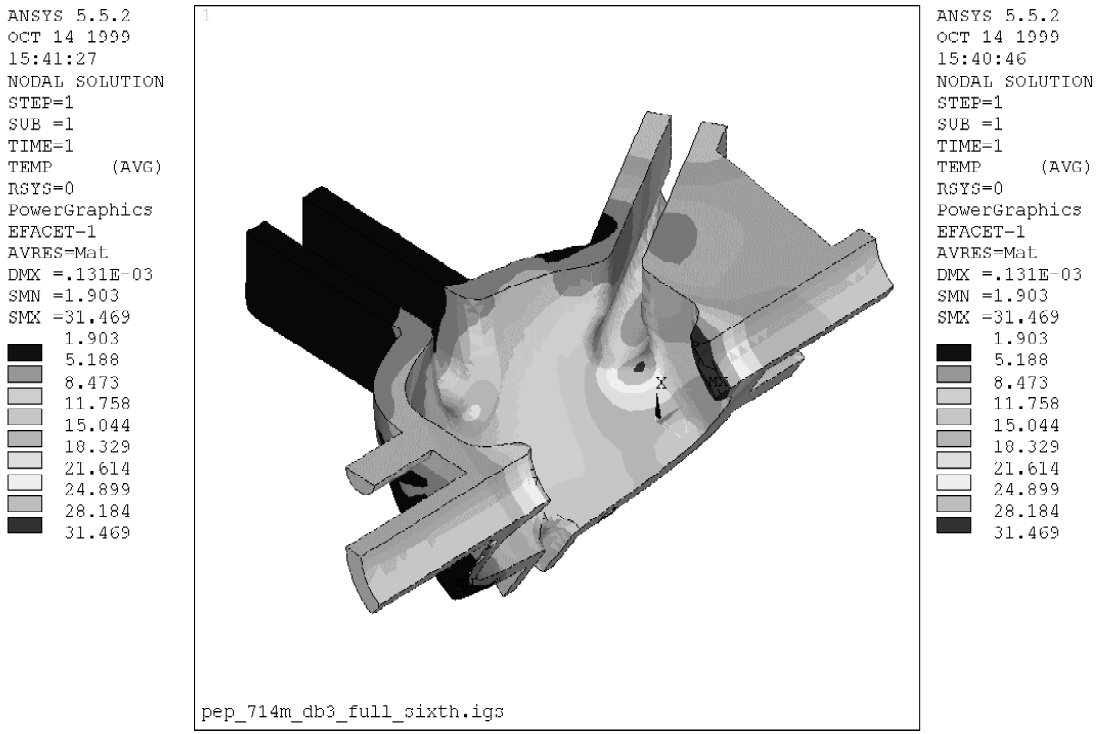

Finite element analysis

- Displacement
  - —Constraint at single support

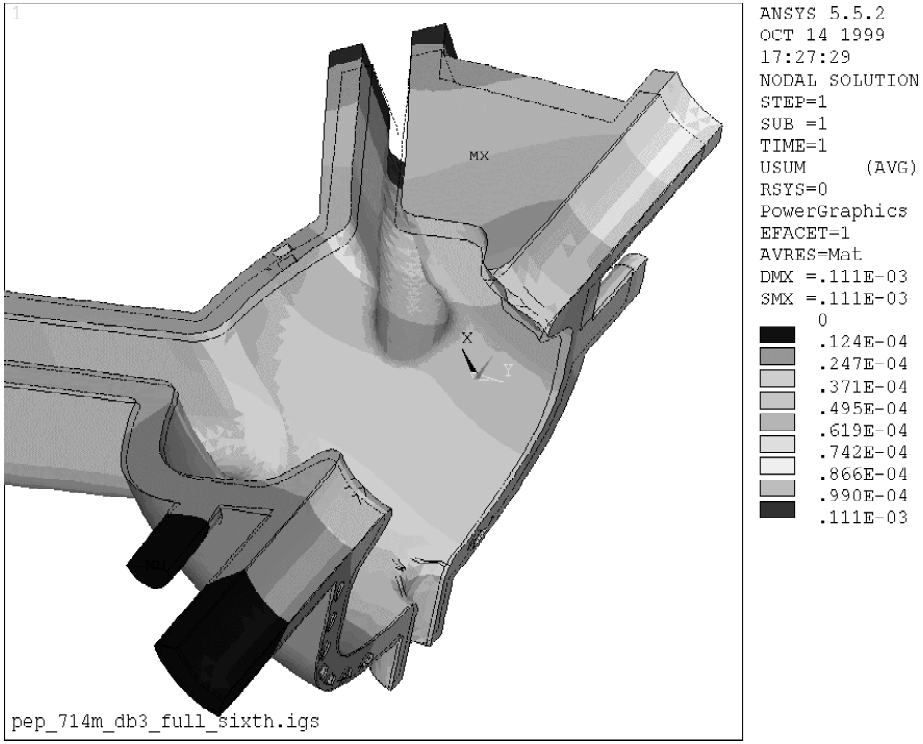

RF window

- Pre-stressed ceramic window
  - PEP-II style
  - Steel ring with copper plating
  - Molybdenum keeper ring during braze

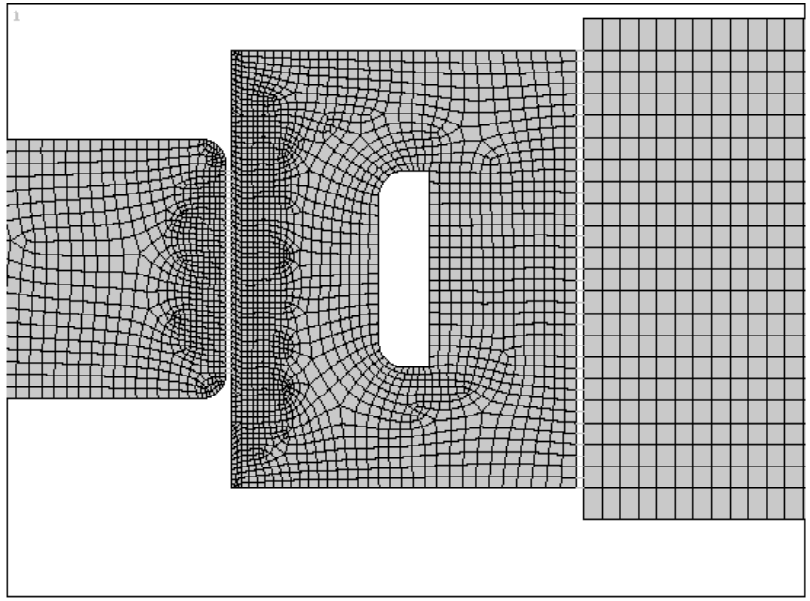

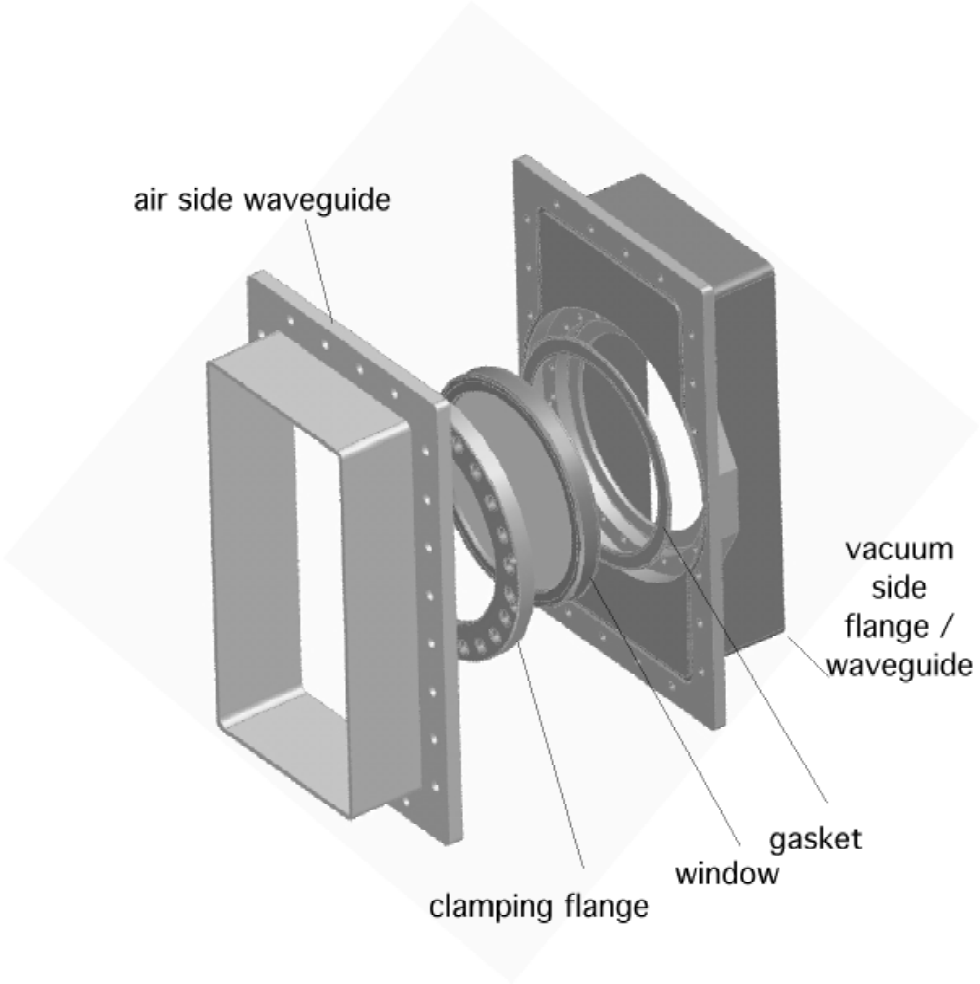

RF window

- Window tuning

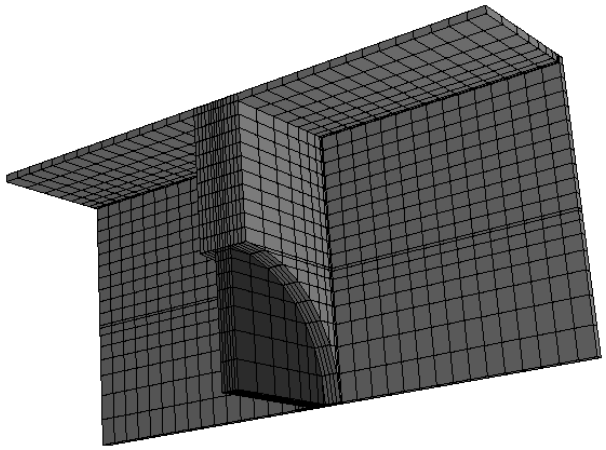

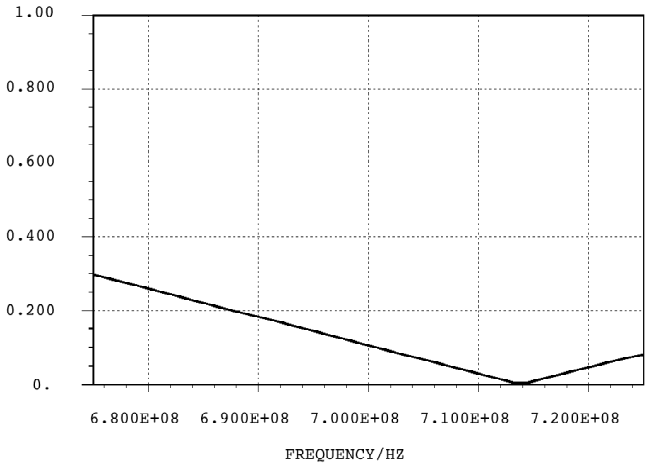

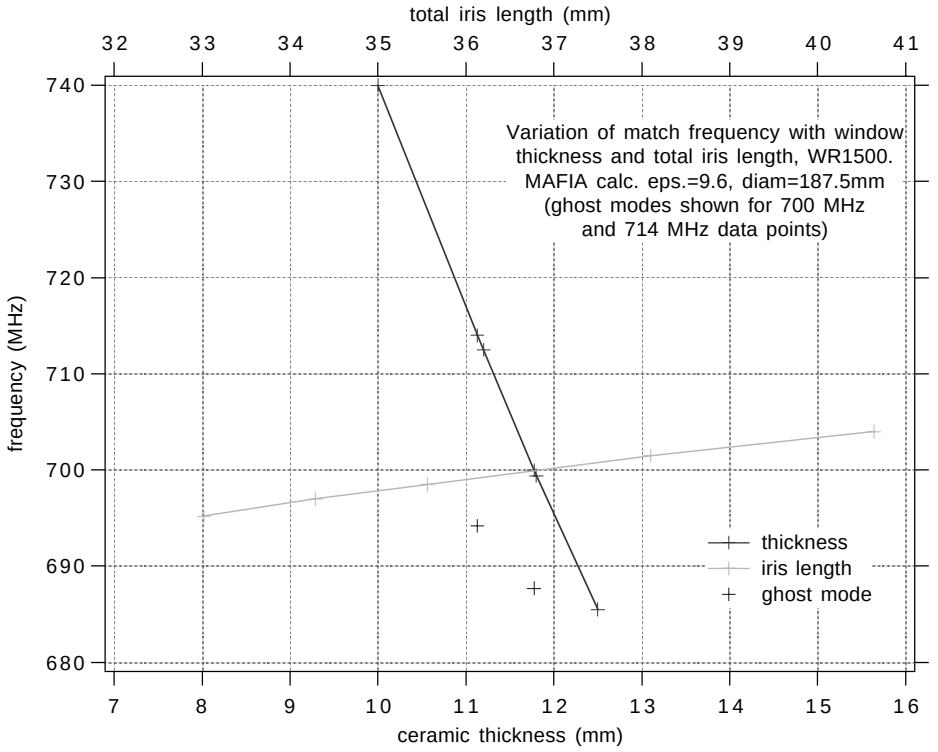

LANL 700 MHz window

HOM loads

- dogbone coupling aperture
  - —Reduces power density
- Transform to rectangular waveguide
- Waveguide loads based on PEP-II design

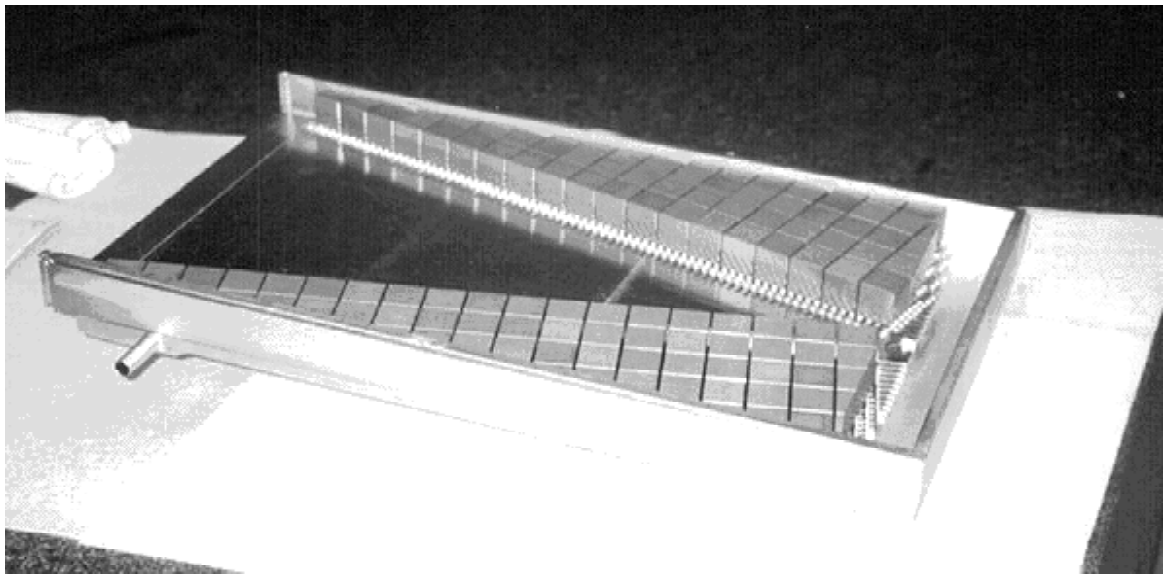

Tuner

- Careful design may allow fingerless tuner

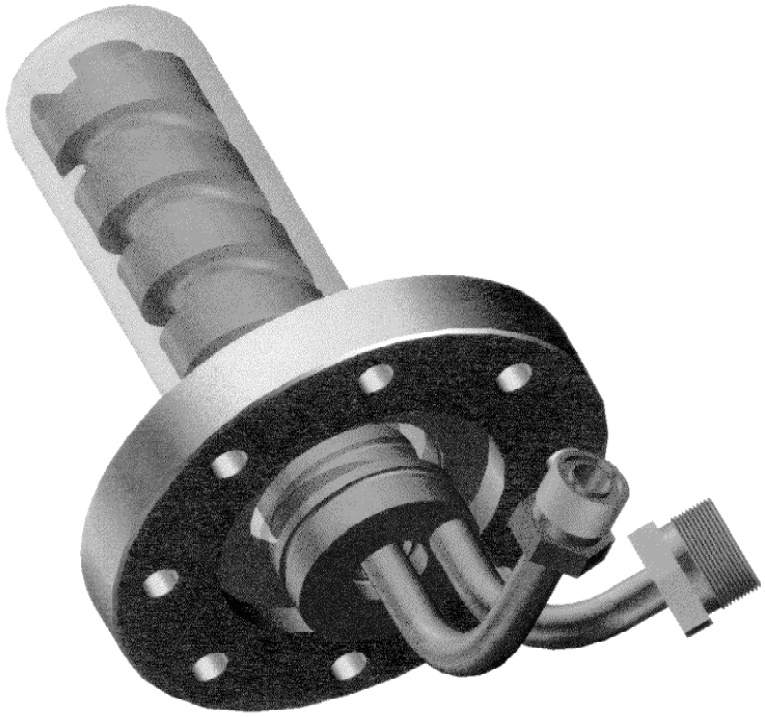

Coupler

- PEP-II style offset rectangular
- Circular

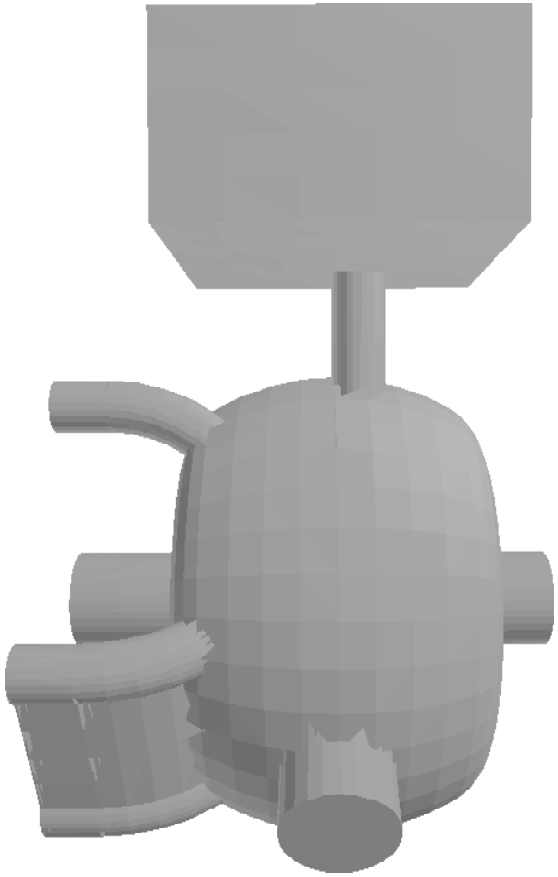

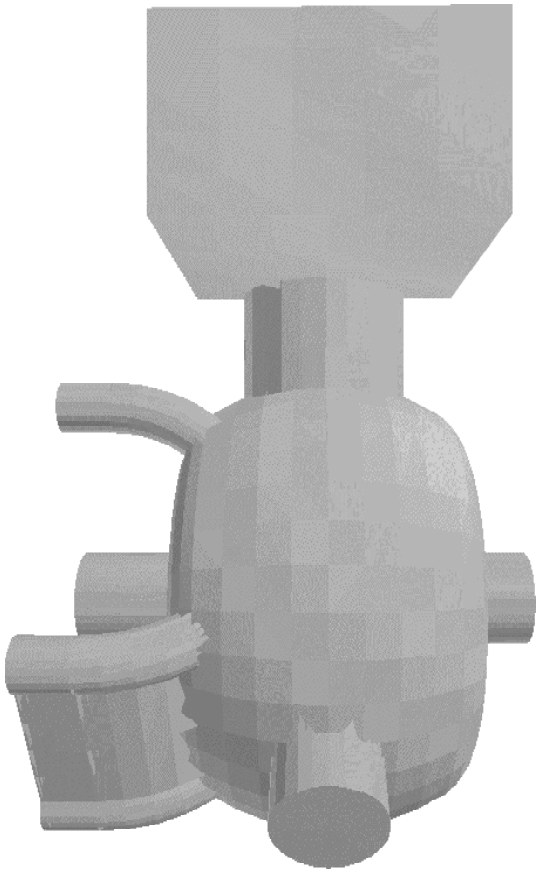

Gap transient effects

- Bunch-to-bunch synchronous phase variation
  - Leads to energy variation after bunch compression
  - 4¡ / 30 ps

$$\Delta\phi \approx -\frac{2kI_oT_{gap}}{V_{cavity}\sin\phi_{synch}}$$

- Compensation techniques
  - Adaptive-inverse feedforward with broadband klystron (˜f ¯ 10 MHz)

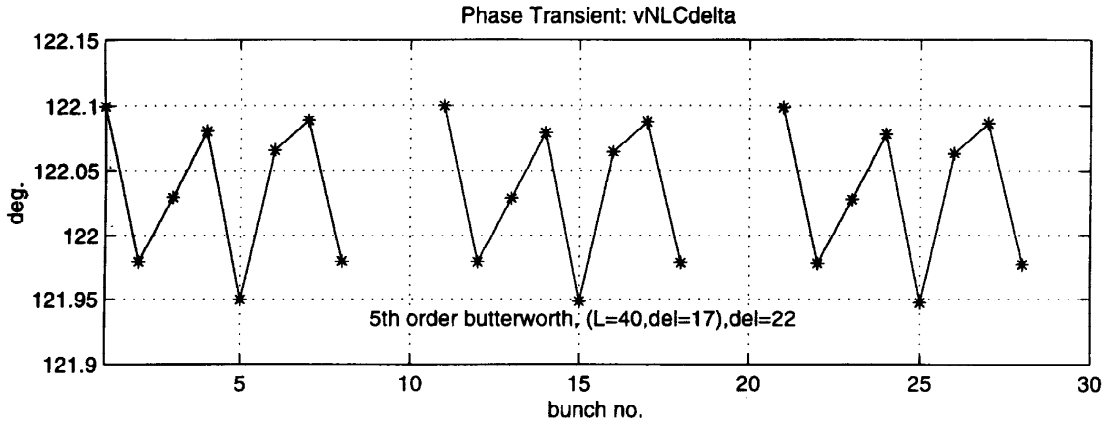

  - Harmonic cavities
  - High-stored-energy cavities
  - Ring off-frequency (¶f ¯ 40 kHz)

Gap transient effects

- Studies of low R/Q accelerating structures
  - Minimize interaction between beam and RF systems
  - Reduce transient effects

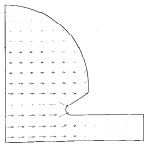

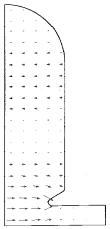

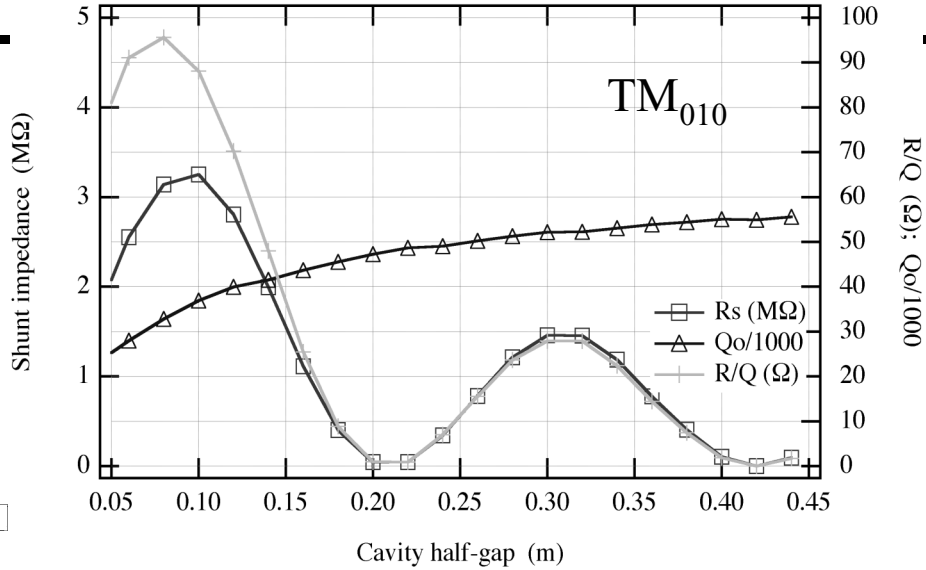

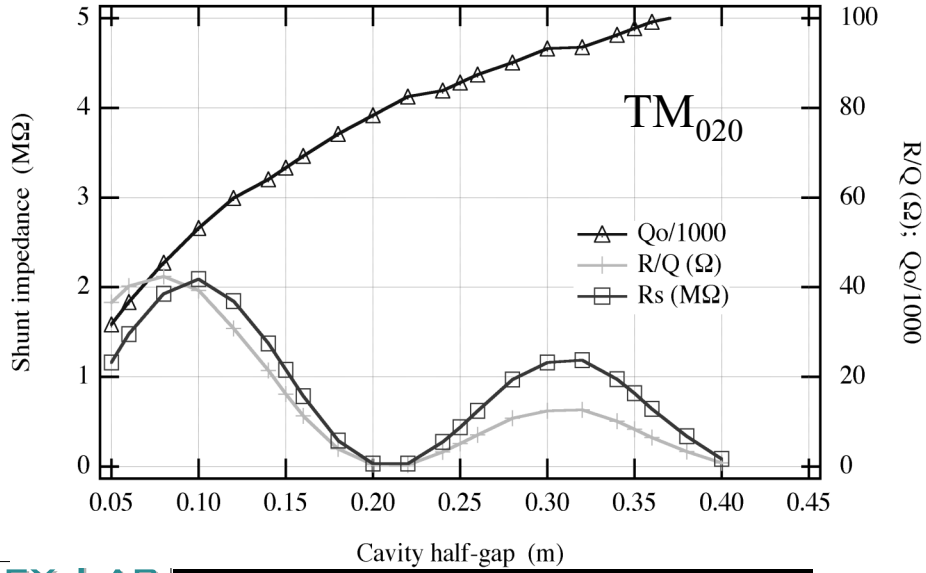

Wiggler parameters

- Physics reference parameters (ZDR, SSRL B.L.9)
  - $\lambda = 27$ cm
  - $B_0 = 2.15$ T, sinusoidal field
  - Total $\int B^2 dz = 106$ T^{2}m

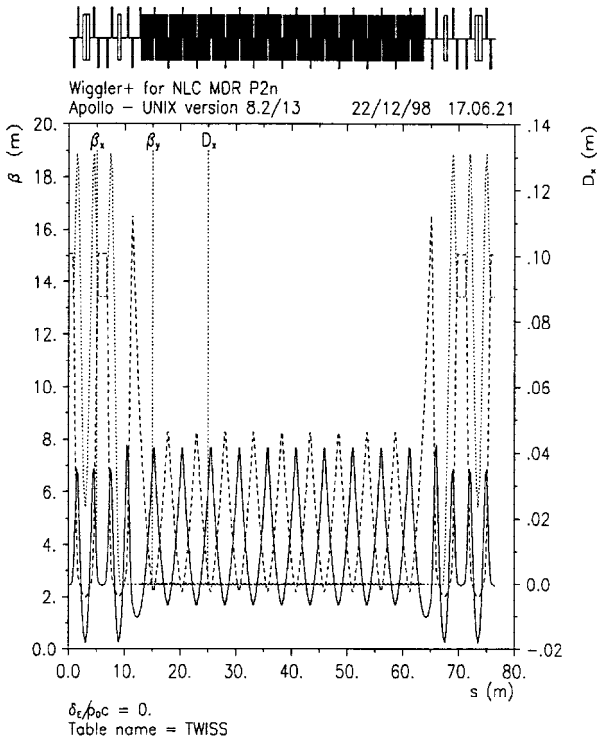

- *Superconducting*
  - *$B_0 = 3.2$ T*
  - *$L_{total} = 26$ m*
  - *$g = 2.5$ cm*

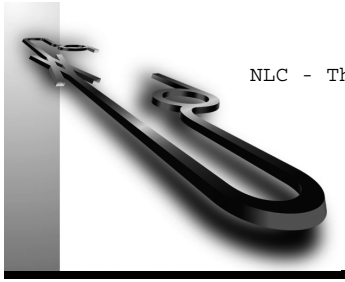

Wiggler technologies

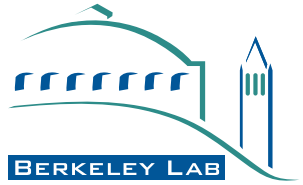

	Advantages	Disadvantages
Electromagnet	Standard technology Easy to turn off, tune field Radiation tough Relatively low initial cost	• Consumes power • Complicated connections • Narrow lateral field distribution
Hybrid	• Does not require power • Well tested in light sources	• Must move to turn off • Subject to radiation damage • Field varies with temperature • Relatively high initial cost
Superconducting	• Shorter straight • Larger gap	• Cryogenic infrastructure • Non-standard technology • Costly • Uncertain reliability

Electromagnet wiggler

- Advantages
  - Standard technology
  - Easy to turn off and tune B_0
  - Radiation tough
- Limitations
  - Field strength limited by current density and pole saturation - poor for large g/λ
  - Consumes power
  - Complicated connections and plumbing
  - Narrow lateral field distribution

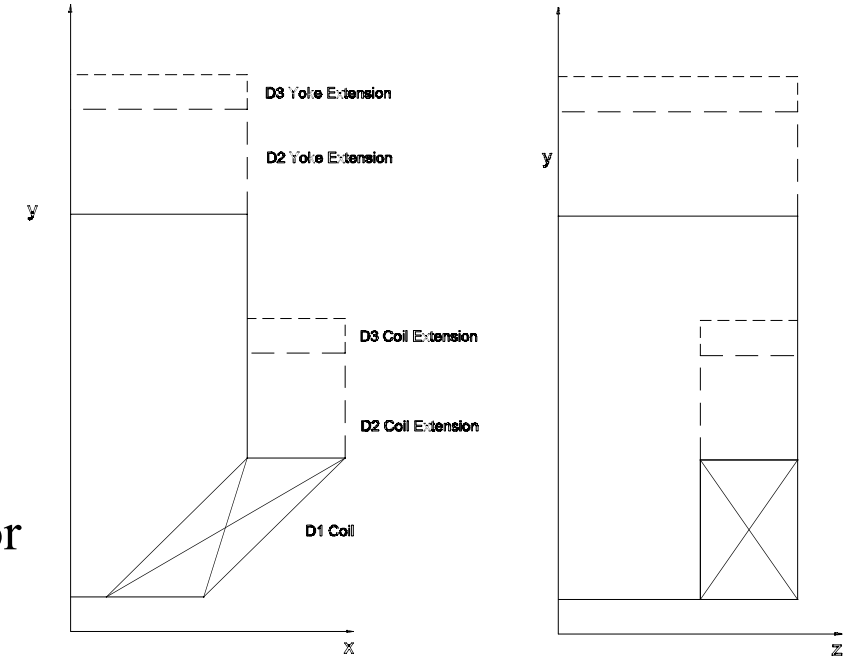

Electromagnet wiggler

- $B_0 = 2.05$ T
- 0.32 Tm^2/pole
- $\lambda = 27$ cm
- Wiggler section 4.51 m long
- Quadrupole spacing 5.09 m
- Magnet gap = 2 cm
- 1010 pole material
- SmCb inserts, reverse biasing to reduce pole saturation
- $j = 1000$ A/cm^2
- Power requirement = 25 kW m
- 10 sections, $L_{total} = 50.9$ m

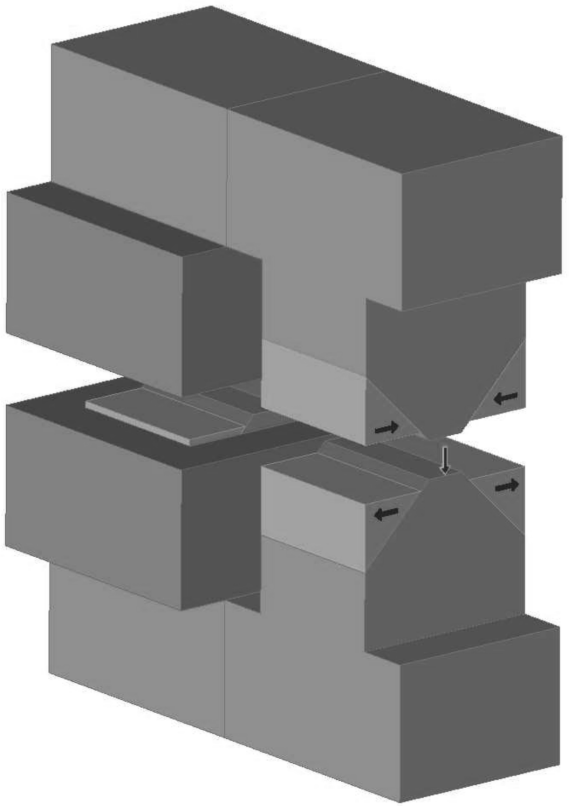

Longitudinal field profile

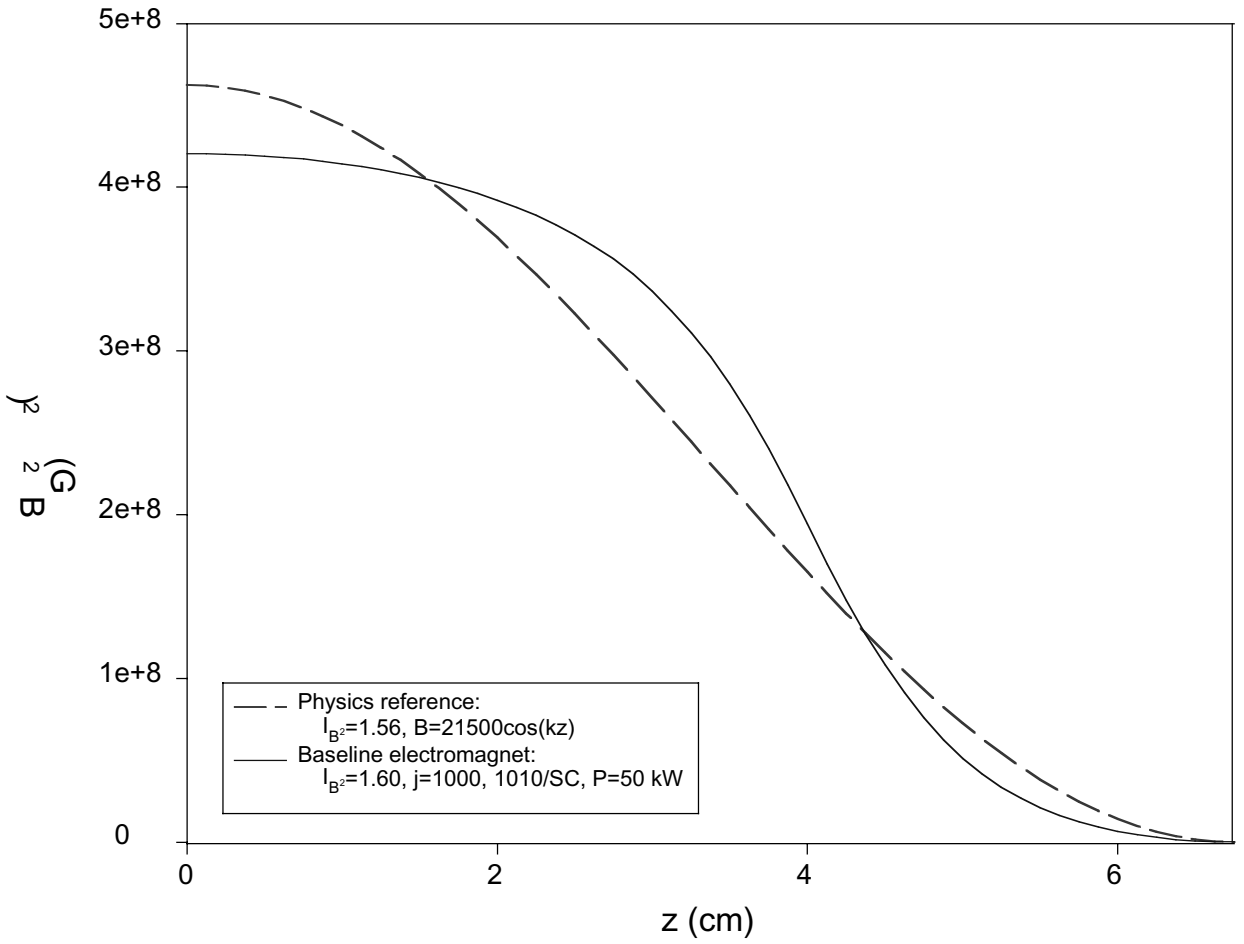

Transverse field profile

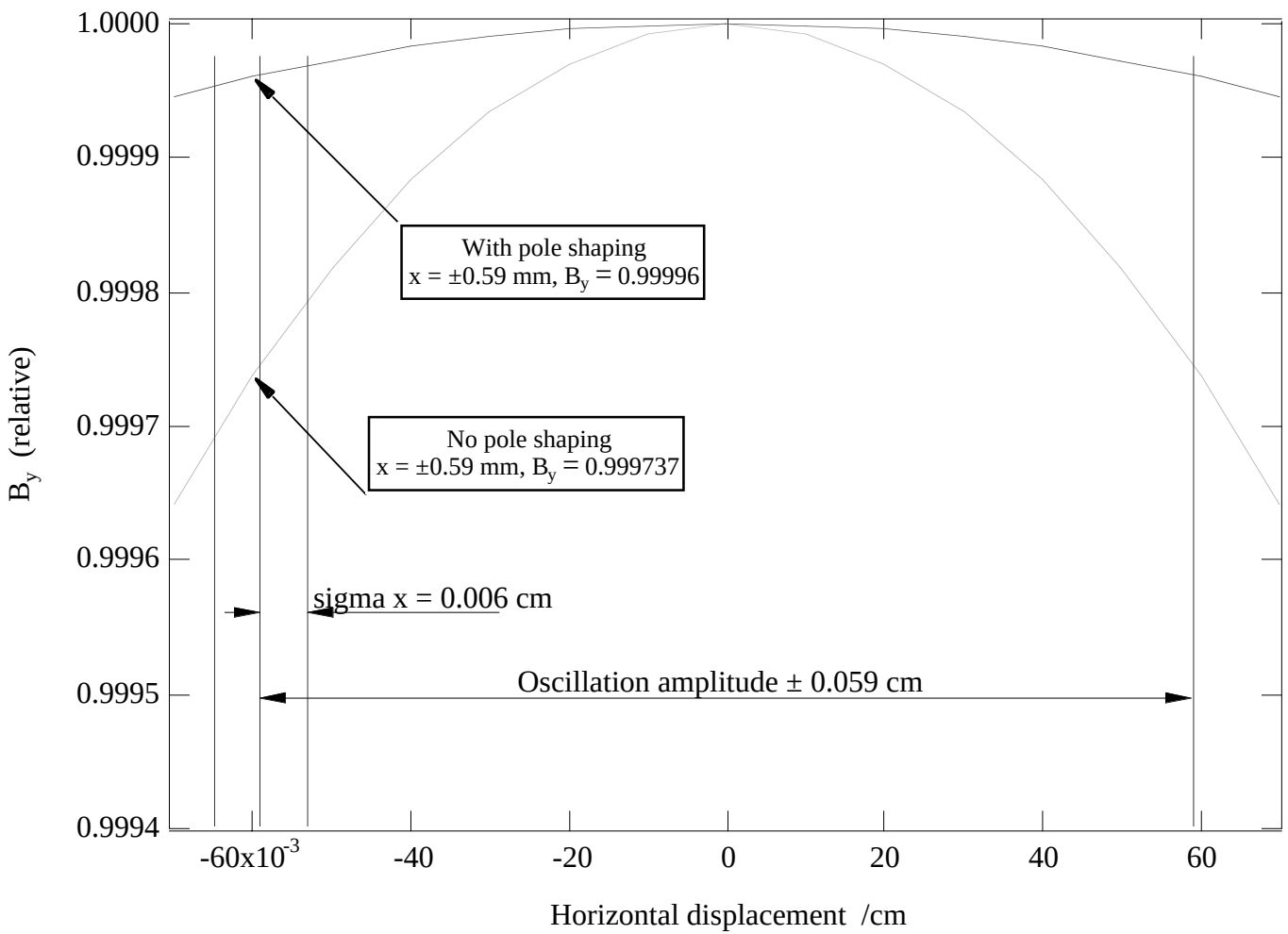

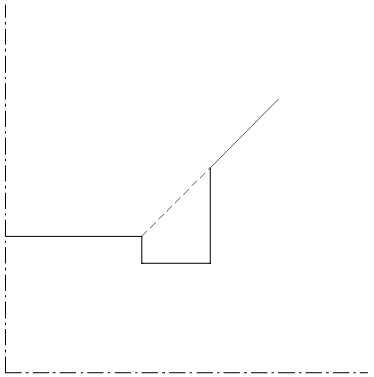

Displacement errors

Field curvature gives rise to displacement of beam through wiggler

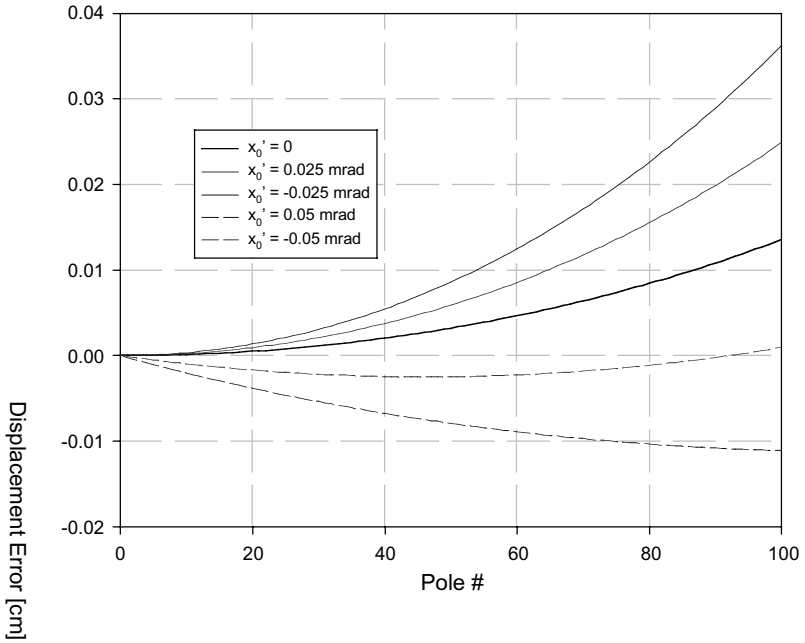

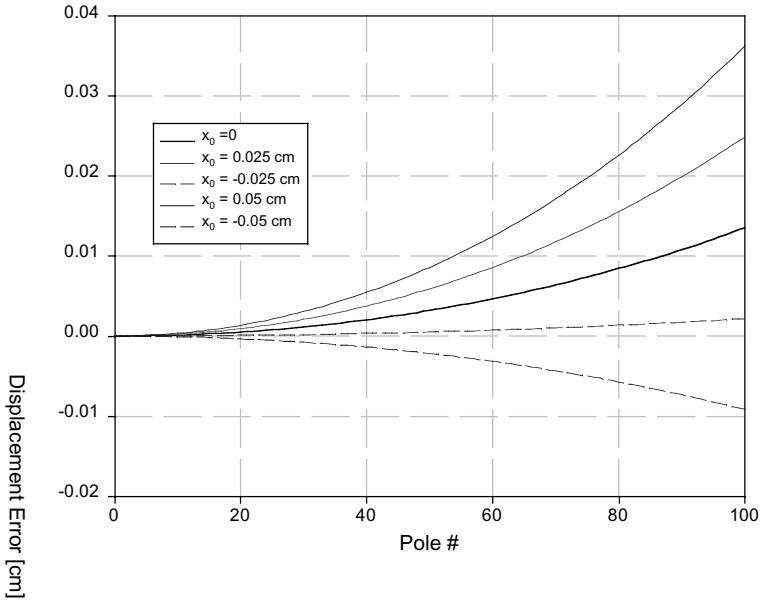

Accelerator physics studies required

Layout

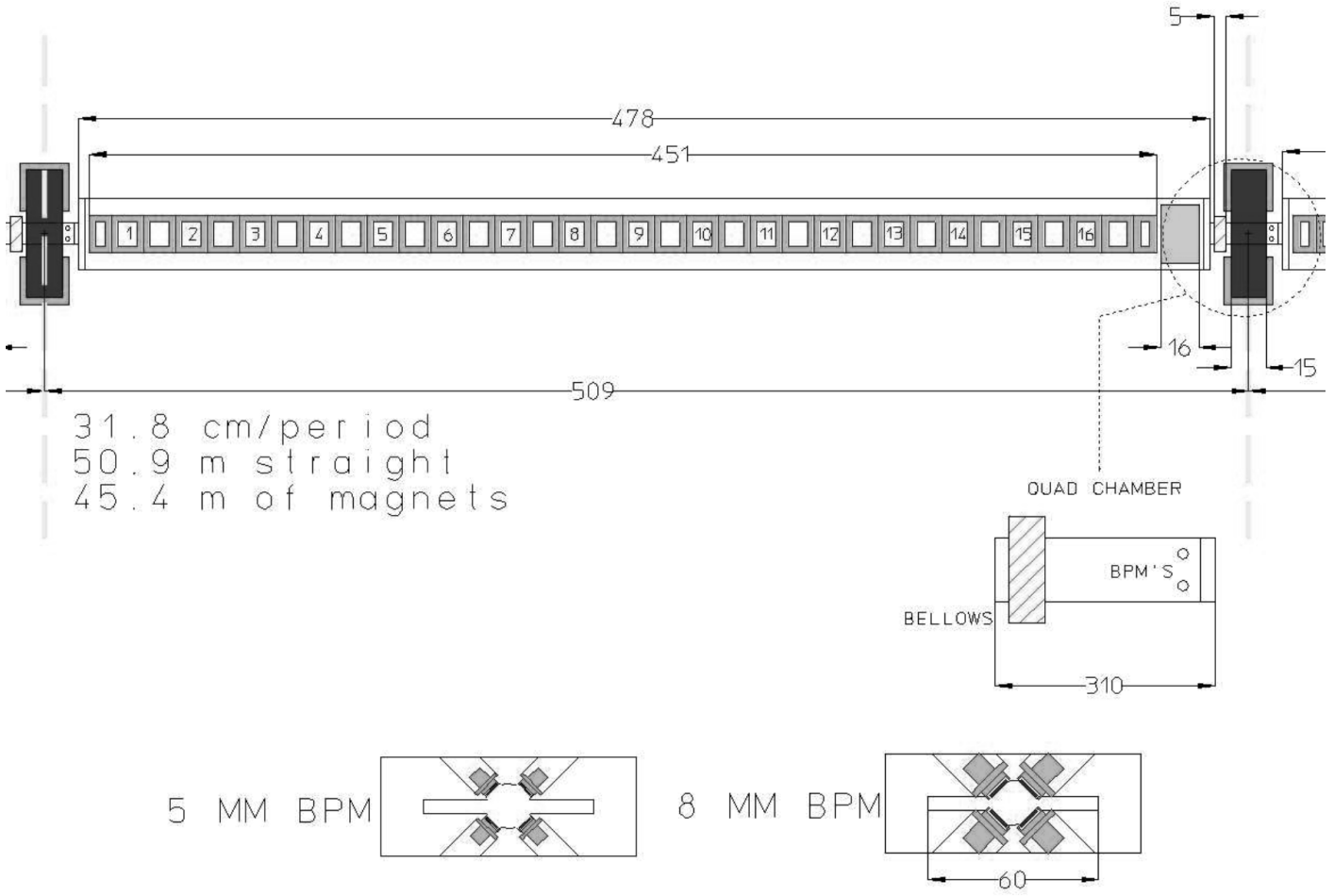
5
478
451
1
2
3
4
5
6
7
8
9
10
11
12
13
14
15
16
16
15
509
31.8 cm/period
50.9 m straight
45.4 m of magnets
QUAD CHAMBER
BPM'S
BELLOWS
310
5 MM BPM
8 MM BPM
60

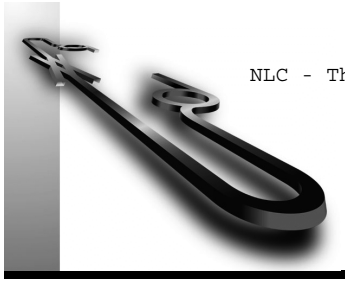

BPM s and TE modes

- Vacuum chamber through quadrupole houses BPM s
- Chamber width reduced
  - Maintain slots to minimize impedance and ramein in shadow of photon stop
  - Slot width 6 cm
- TE mode cut-off 2.86 GHz
  - TE mode attenuation 25 dB in 5 cm

Photon fan

- Opening angle 0.5 mrad
  - c.o.d. 0.25 mrad
  - $1/\gamma$ 0.25 mad
- Wiggler power output 66 kW
- Normal power density 605 Wmm^{-2}
- Angle photon stop to reduce power density to 20 Wmm^{-2}

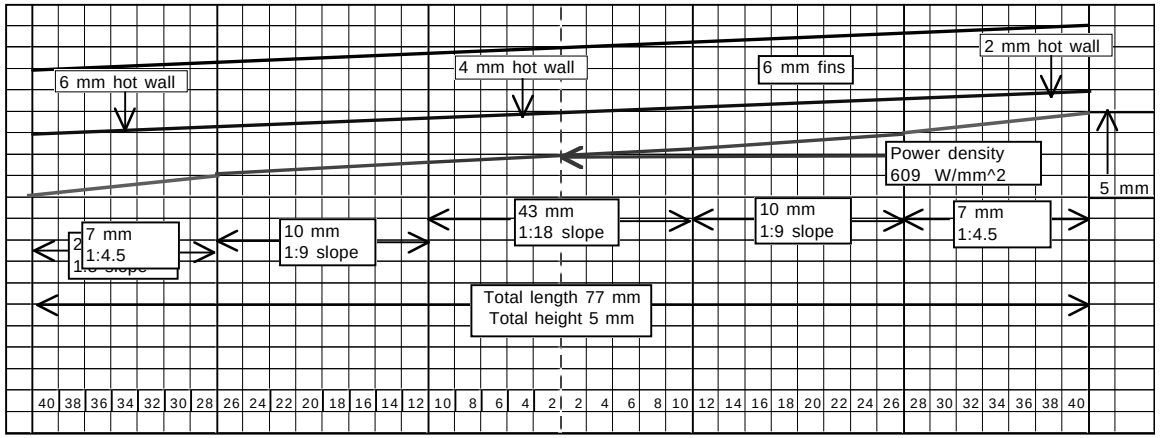

Distance from pole to photon target m	Width of photon fan on absorber mm	Normal power density from each pole W/mm^2	Normal power density from all poles W/mm^2	Safe slope	Height of the beam mm
0.14					
0.27					
0.41					
0.54					
0.68					
0.81					
0.95					
1.08					
1.22					
1.35	0.68	16.597	605.3	30.3	1.4
1.49	2.6	39.1	588.7	29.4	1.5
1.62	4.4	45.2	549.6	27.5	1.6
1.76	6.3	44.8	504.5	25.2	1.8
1.89	8.2	42.1	459.7	23.0	1.9
2.0	10.026	38.6	417.6	20.88	2.0
2.2	11.89	35.1	378.9	18.95	2.2
2.3	13.76	31.8	343.8	17.19	2.3
2.4	15.63	28.8	312.1	15.60	2.4
2.6	17.50	26.1	283.3	14.16	2.6
2.7	19.37	23.8	257.2	12.86	2.7
2.8	21.24	21.7	233.4	11.67	2.8
2.97	23.1	19.8	211.7	10.6	3.0
3.11	25.0	18.2	191.9	9.6	3.1
3.24	26.8	16.76	173.7	8.7	3.2
3.38	28.7	15.48	156.9	7.8	3.4
3.51	30.6	14.33	141.5	7.1	3.5
3.65	32.4	13.31	127.1	6.4	3.6
3.78	34.3	12.38	113.8	5.7	3.8
3.92	36.2	11.55	101.4	5.1	3.9
4.05	38.1	10.80	89.9	4.5	4.1
4.19	39.9	10.12	79.1	4.0	4.2
4.32	41.8	9.50	69.0	3.4	4.3
4.90	49.8	7.40	50.5	3.0	4.9
5.04	51.7	7.01	52.1	2.6	5.0
5.17	53.6	6.65	45.1	2.3	5.2
5.31	55.4	6.31	38.4	1.9	5.3
5.44	57.3	6.00	32.1	1.6	5.4
5.58	59.2	5.72	26.1	1.3	5.6
5.71	61.0	5.45	20.4	1.0	5.7
5.85	62.9	5.20	14.9	0.7	5.8
5.98	64.8	4.97	9.7	0.5	6.0
6.11	66.6	4.75	4.8	0.2	6.1

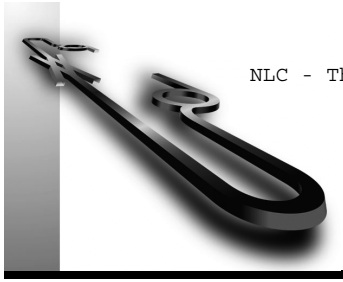

Gas load at photon stops

BERKELEY LAB

- Required pressure < 10^{-9} Torr
- Lumped photon stop
  - 7×10^{19} photons s^{-1}
    - $\eta \sim 10^{-5}$
      - Gas load 2×10^{-5} Torr l s^{-1}
    - 2,000 l s^{-1} required for 10^{-9} Torr
- Estimate η 10^{-5} achieved with 10^{24} photons
  - Wiggler produces 10^{24} photons in about 4 hours at full current

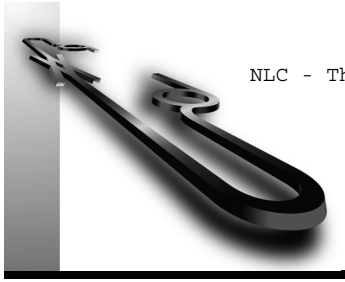

Thermal outgassing

- Thermal outgassing in chamber between photon stops
  - Gas load 1.2×10^{-6} Torr l s^{-1}
    - 1200 l s^{-1}
  - Conductance to lumped pumps 10 l s^{-1}

$\Rightarrow$ Need distributed pumping

Lumped TSP pumping

- TSP pumps scaled from ALS
  - 300 cm^2 inlet area
  - Condensation surface ~ 24,000 cm^2
  - Bulk pumping
  - Pumping speed 28,000 l s^{-1}
  - Ti surface ~ 4000 cm^2
  - Capacity 96 Torr l
- 7 kW absorber fluorescence
  - TSP requires cooling

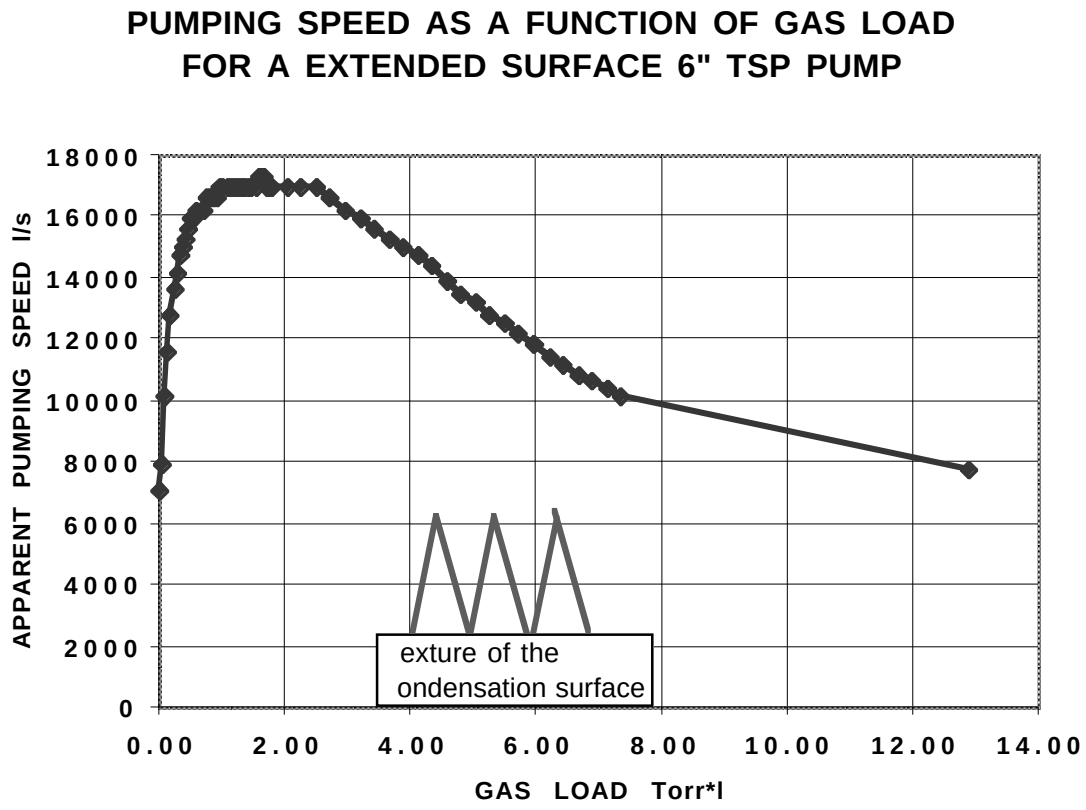

Lumped TSP pumping

- Photon stops on either side of beam centerline
- TSP chamber directly underneath photon stops
  - Ion pump and roughing pump access

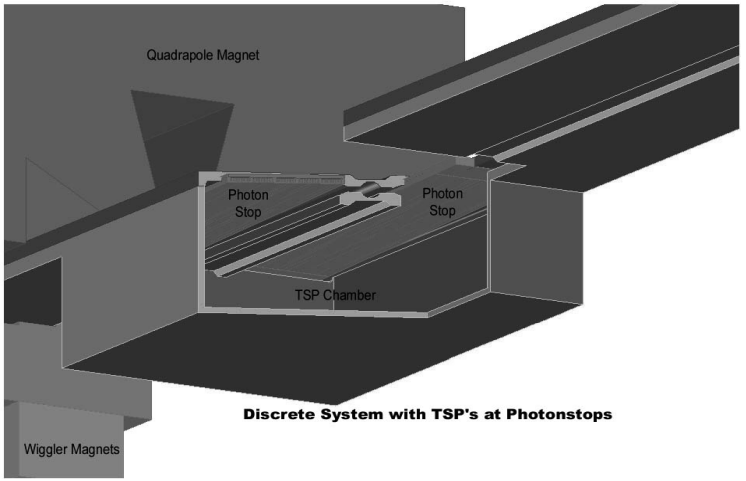

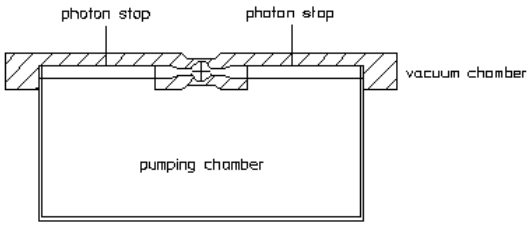

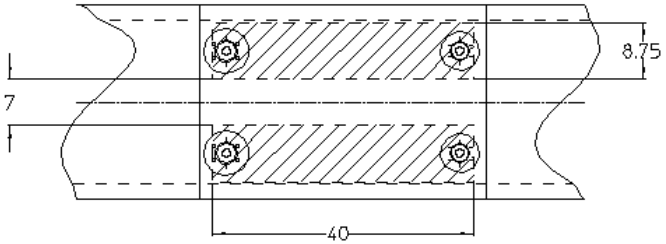

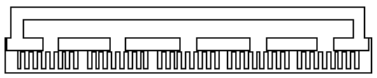

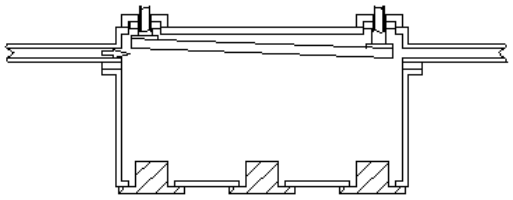

DISCREET PHOTON STOP @ 1.4 DEG.

Photon Stops

- 20 kW per photon stop
- 20 Wmm^{-2} maximum

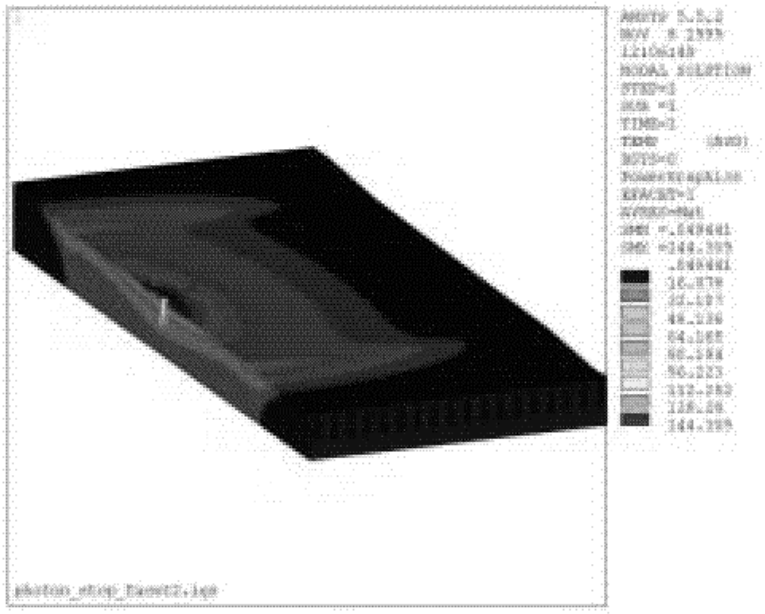

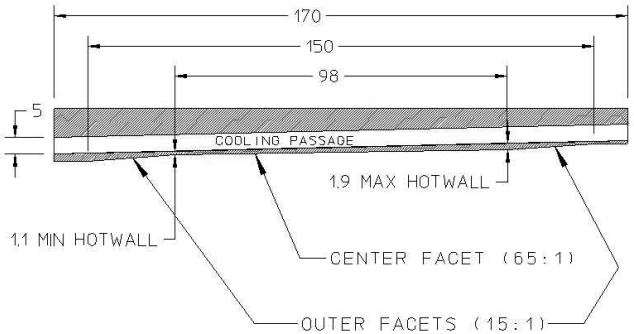

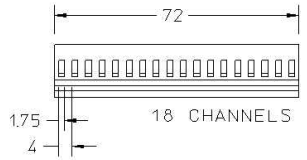

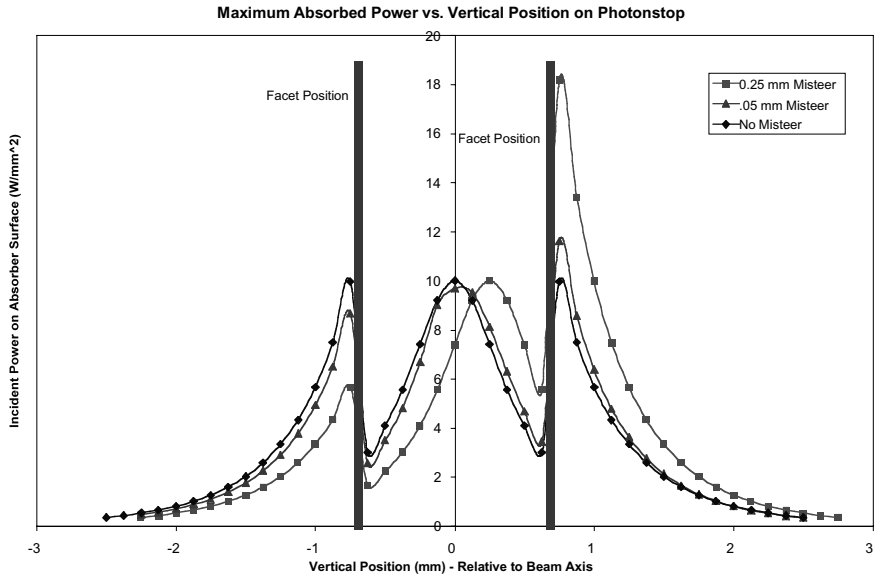

Distributed TSP pumping

Conductance ≈ 8000 l s^{-1}

Capacity ≈ 75 Torr l (about 1 year of pumping)

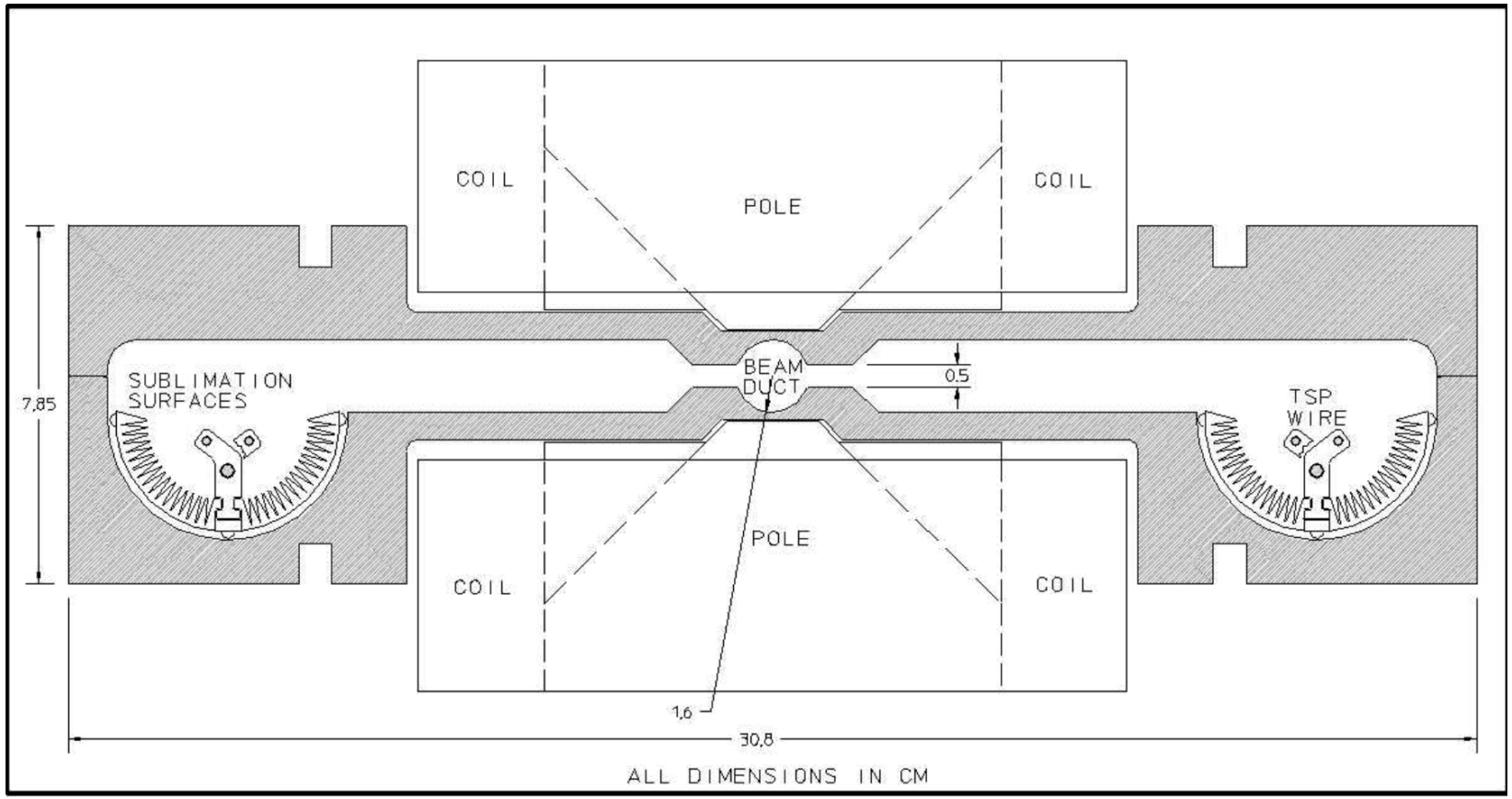

Displacement under vacuum

Upper surface constrained

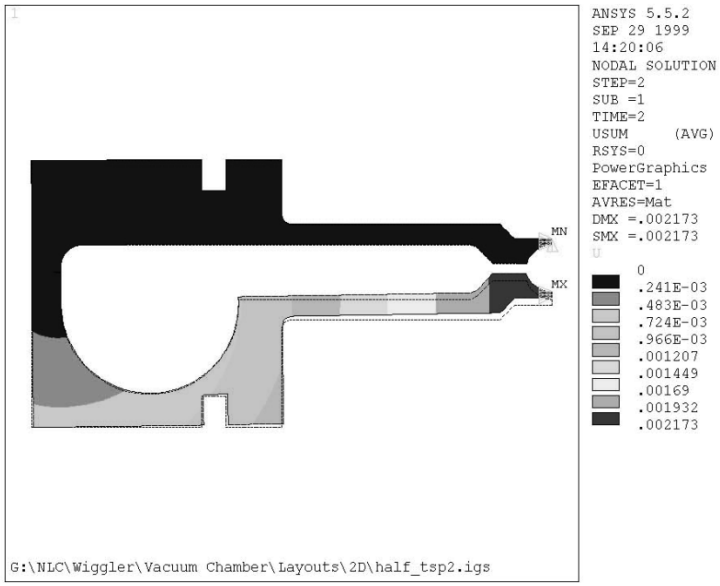

Displacement 2 mm

Upper and lower pumping antechamber surfaces constrained

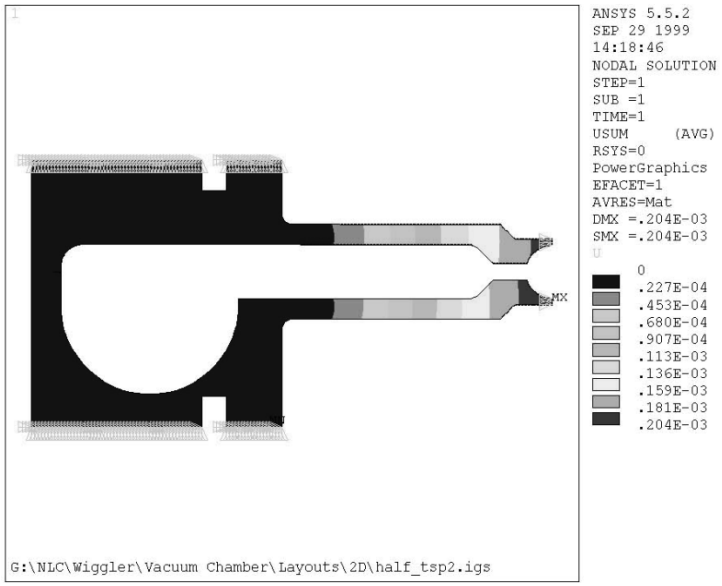

Displacement 0.2 mm per side

Vacuum stress

Upper surface constrained

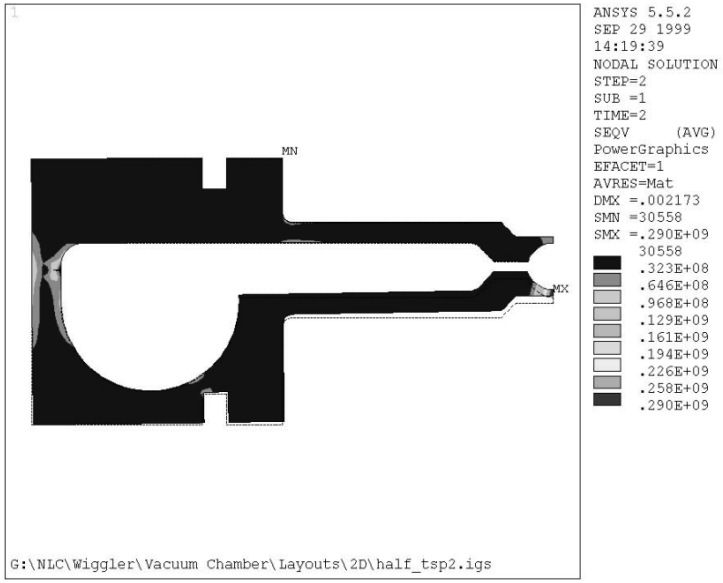

Stress 40,000 psi

Upper and lower pumping antechamber surfaces constrained

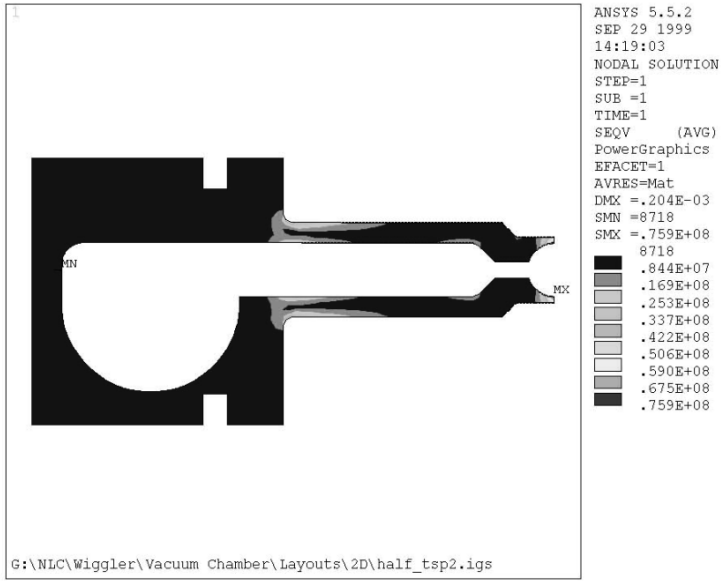

Stress 11,000 psi

Layout Options

BERKELEY LAB

- Trade-off wiggler section length *vs* arc cells

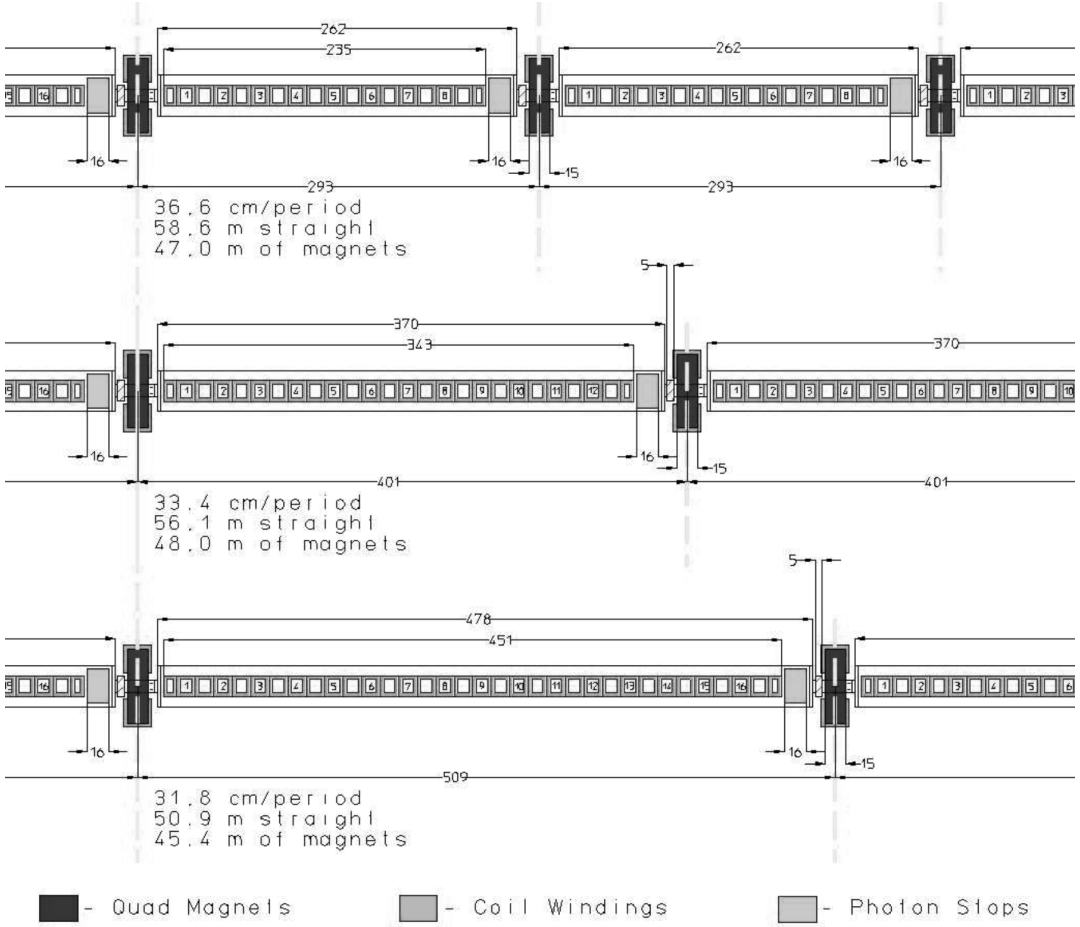

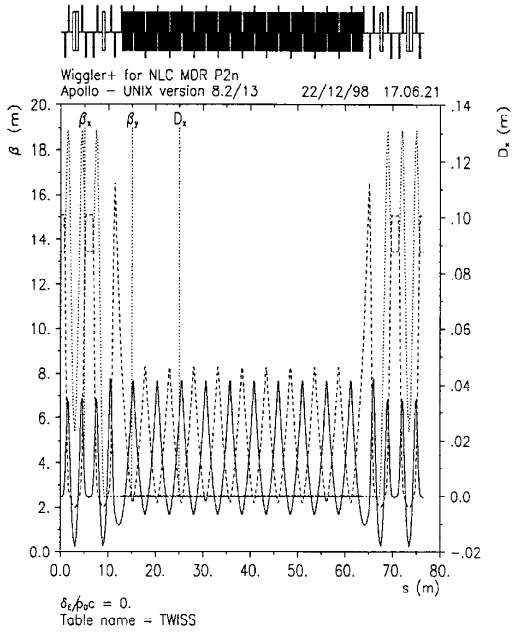

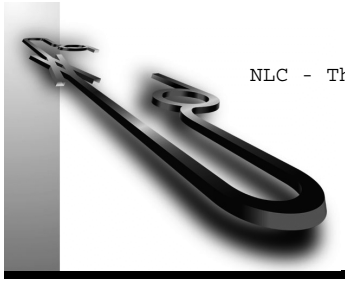

Summary

- Baseline cavity design complete
  - Developed engineering tools to quickly optimize design changes
- Details to be worked out this year
  - Low R/Q structure
  - Loads, Tuner, Window, Coupler
- Baseline wiggler magnet and vacuum system
  - Electromagnet
  - Lumped and distributed TSP pumping
- Need accelerator physics studies of wiggler effects
- Design downstream in-line photon stop