NanoBPM tests in the ATF extraction line

Calibrate movers (tilters) and BPM's

Understand and test dynamic range and resolution

June 2003

Marc Ross

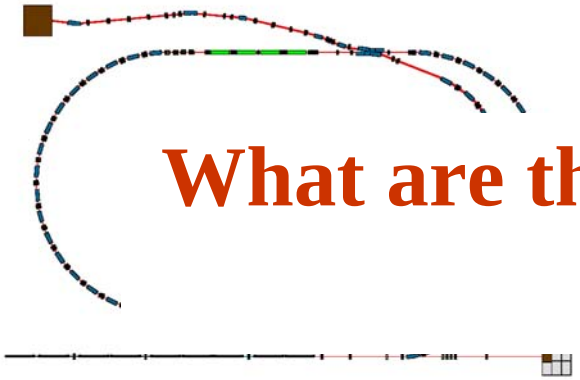

What are the uses of nanometer-resolution BPMs?

- 200 nm resolution is needed for linac operation (similar for DR and other collider regions)
  - *for LC, this is not it…*
- 3GLS evaluation of sub-micron stability
  - *Interesting, but still not it*
- nanoBPMs:
  - Measure beam position with accuracy better than support stability
    - →Use the beam as a *mechanical 'device'* to prove active stabilization←
  - Measure beam parameters other than position
    - Many applications in beam manipulation - *correlations*

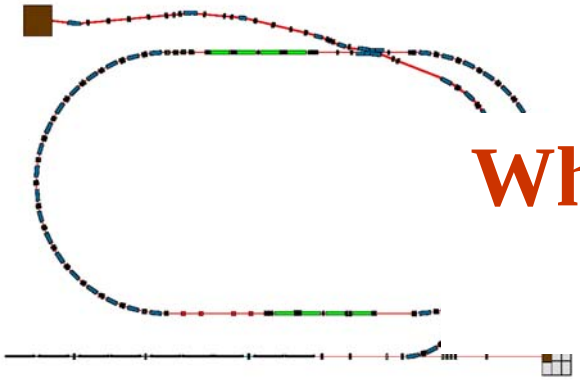

Why are RF BPMs ideal?

- *kTB* energy corresponds to <1nm at 1MHz, room temp.
- Narrow bandwidth
  - Allows easy oversampling and direct downconversion
- Accurate, stable construction
- High central frequency
  - This is what allows *correlation* measurement
  - (ATF 6400 MHz, 28mm $\lambda/2$, 20mm FWHM)
  - (NLC/JLC 11424 MHz, 12mm $\lambda/2$, .25mm FWHM)

More On Using Magnetic Coupling

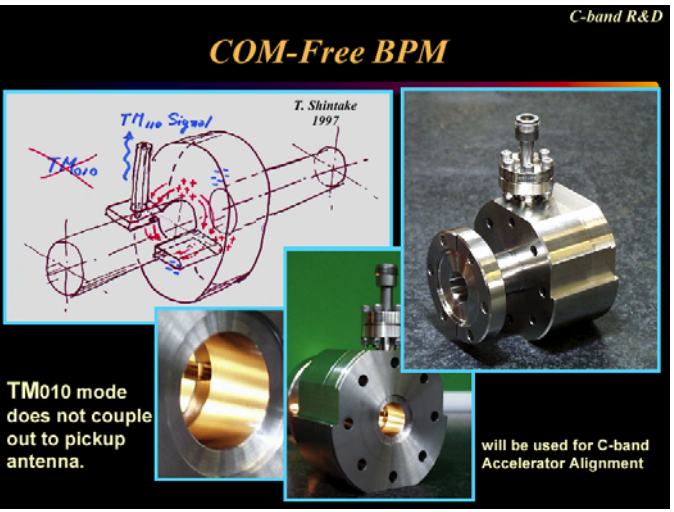

T. Shintake, C-band structure design.

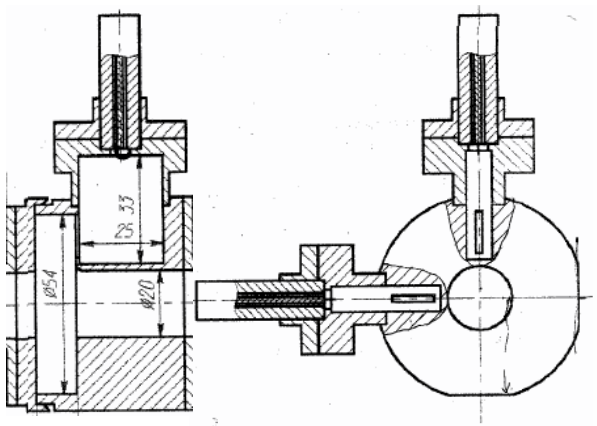

Vladimir Vogel, BINP, for ATF (from a paper by Marc Ross)

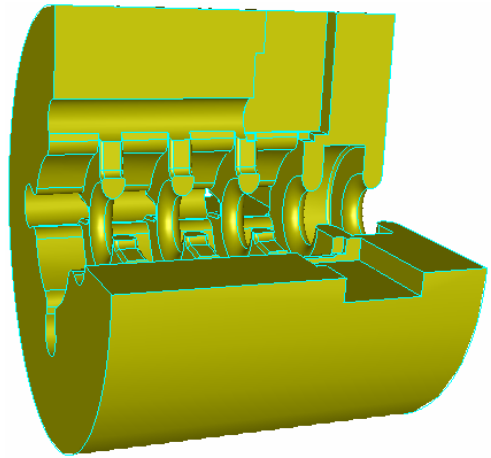

NLC DDS structure. Using slots to damp dipole wakefields. Signal used for SBPM. Micron resolution.

Z. Li

Cavity BPM With TM_{11}-mode Selective Coupler

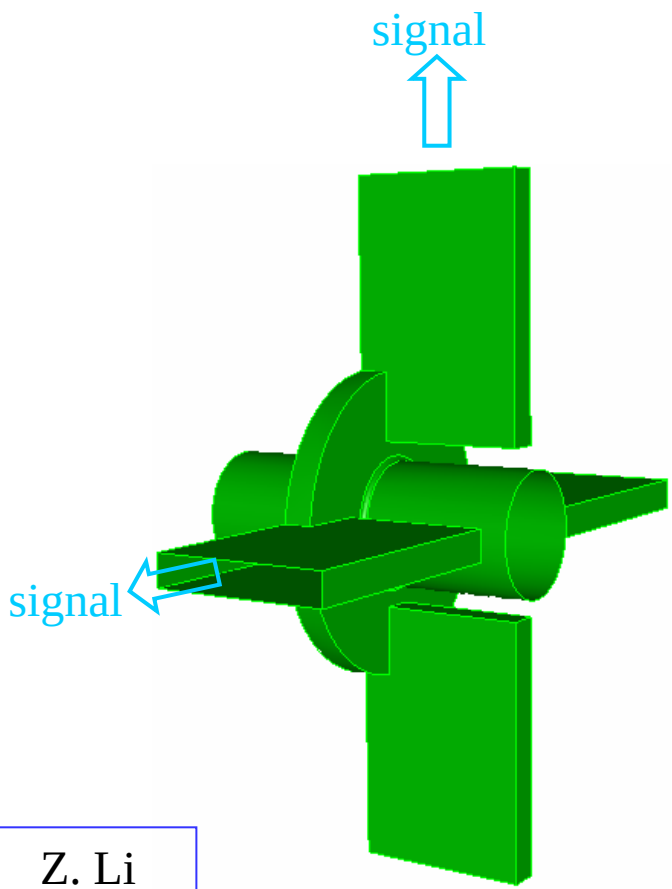

Z. Li

- Dipole frequency: 11.424 *GHz*
- Dipole mode: TM_{11}
- Coupling to waveguide: magnetic
- Beam *x*-offset couple to *y* port

- Sensitivity: 1.6*mV/nC/μm*
  (1.6×10^9*V/C/mm*)

- Couple to dipole (TM_{11}) only
- Does not couple to TM_{01}
  - Low Q with narrow cavity gap
  - May need to damp TM_{01}
  - OR, use stainless steel to lower *Q*

Z. Li

TM_{11} Selective-coupling Scheme

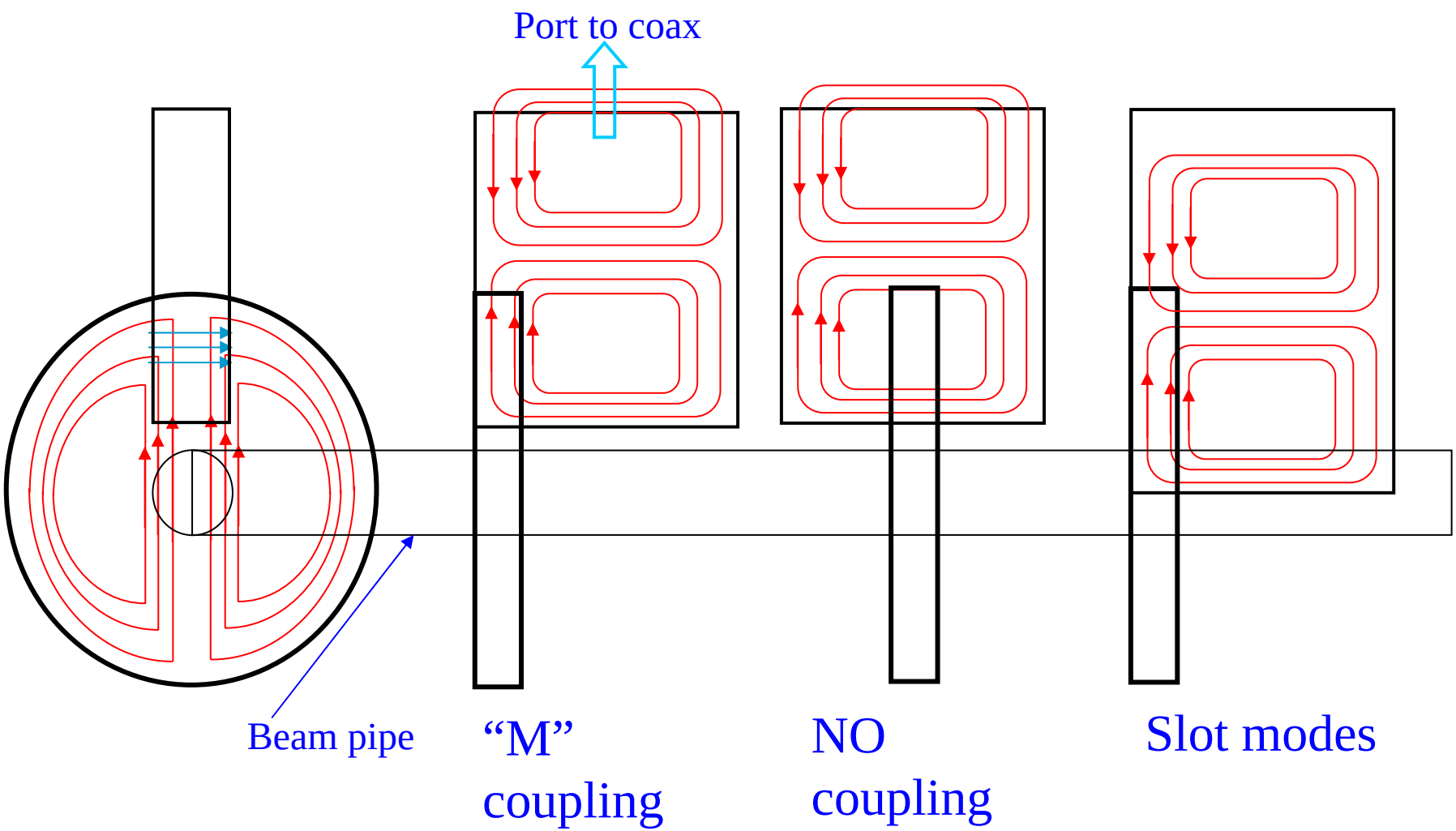

Z. Li

R or *Z* Waveguide Orientation

R-orientation

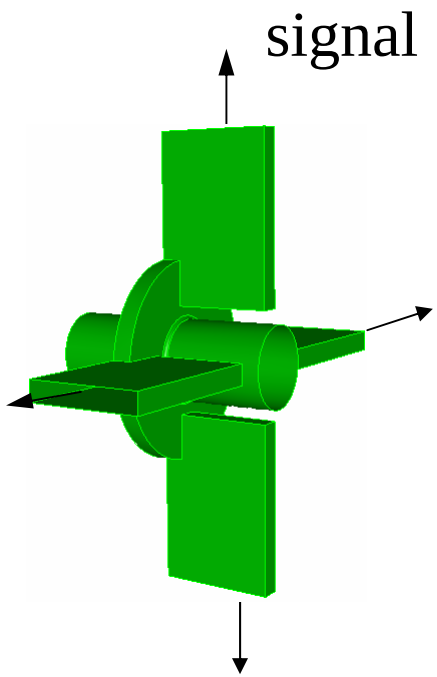

Z-orientation

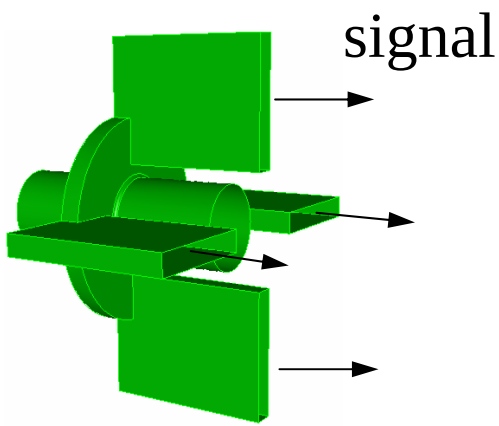

R or *Z* waveguide orientation to fit into different space.

Waveguide Signal With Beam Excitation

Cavity height	3*mm*
Guide height	3*mm*
Guide R pos	8*mm*
Pipe radius	6*mm*
Q_{dipole}	1050
W_L amplitude	1.3E12

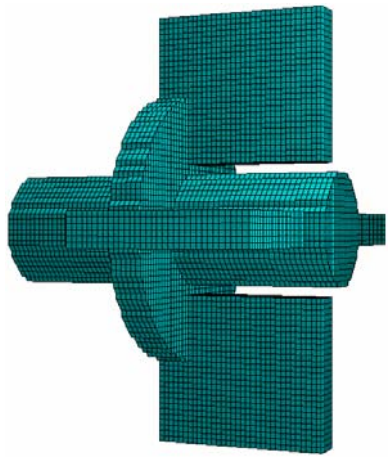

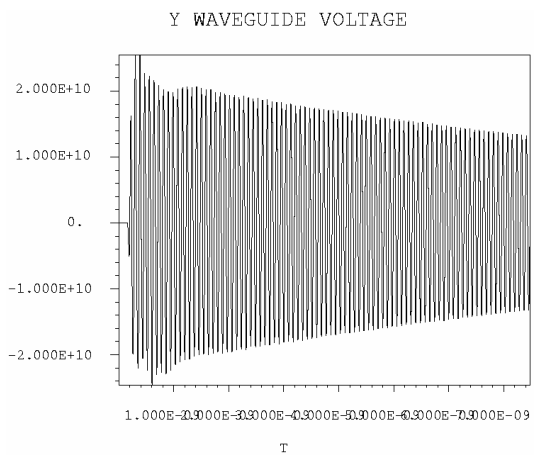

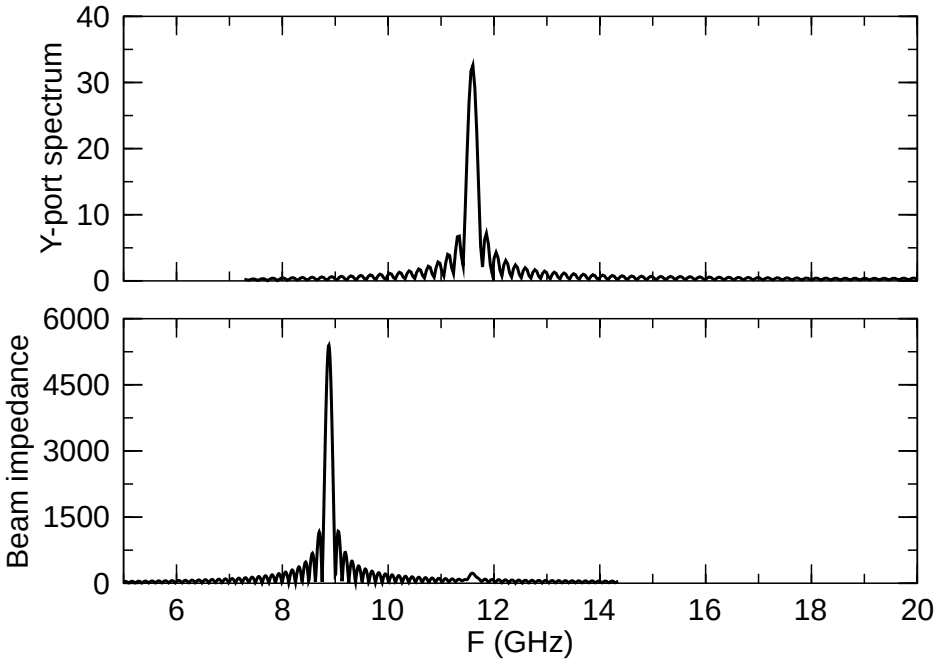

- Beam off in *x* plane
- *y*-port only picks up dipole signal
- Total rejection of TM_{01} mode achieved by the selective coupling scheme

Z. Li

Z. Li

Intrinsic Resolution

- Resolution of BPM limited by signal/noise ratio
- Signal voltage determined by energy loss by the beam and the external coupling

$$V(q,x) = \sqrt{q^2 Z_0 \frac{\beta}{1+\beta} \frac{\omega_0 k_{loss} x^2}{Q_L}}$$

- Thermal noise determined by temperature and bandwidth

$$V = \sqrt{Z_0 k T \Delta F}$$

- Signal/noise ratio independent of bandwidth
- Resolution limit 0.1-*nm* at room temperature for 1-*nC* charge beam

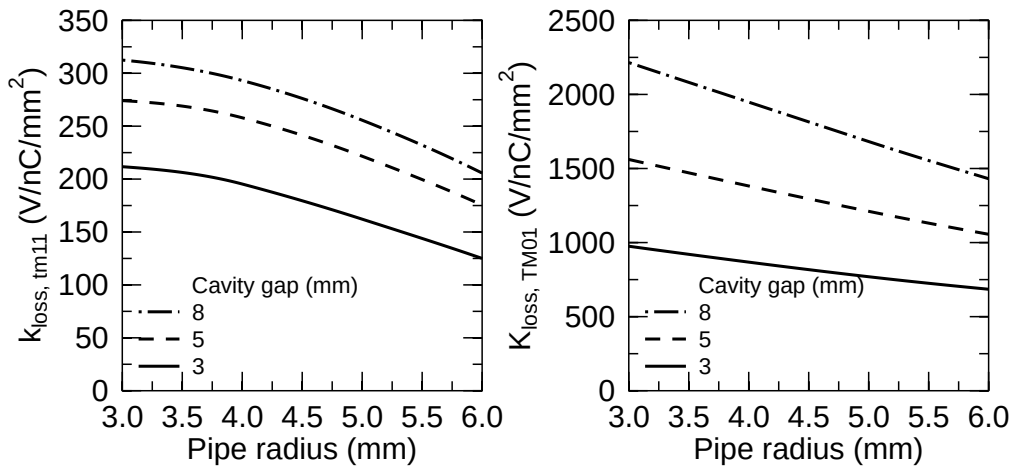

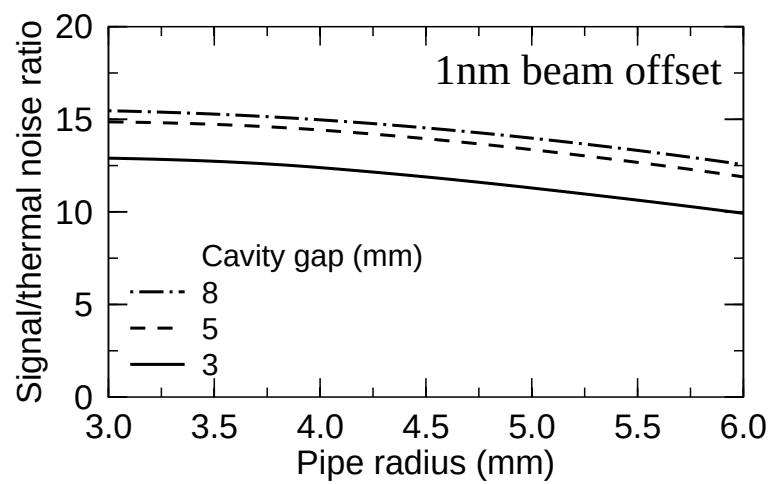

Tolerance

- Frequency: -0.7*MHz/μm* in cell radius. Can be made tunable, but need to keep cavity symmetry
- We consider the impact of machining errors in coupling slots: Δx, $\Delta\theta$ and Δr

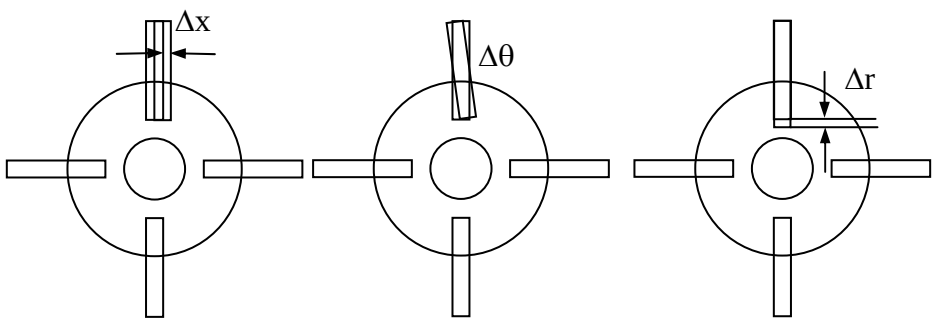

- Both Δx, $\Delta\theta$ errors result in non-zero projection of the azimuthal magnetic field of the TM_{01} mode along side the slot opening, causing coupling of the TM_{01} mode to the waveguide and *x-y* coupling.
- Δr error may shift electric center of modes, results in potential TM_{01} leakage and *x-y* coupling.

Z. Li

Tolerance On Slots

$\Delta x/\Delta\theta$ misalignment

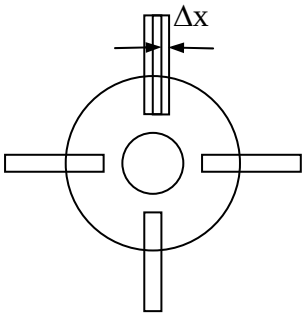

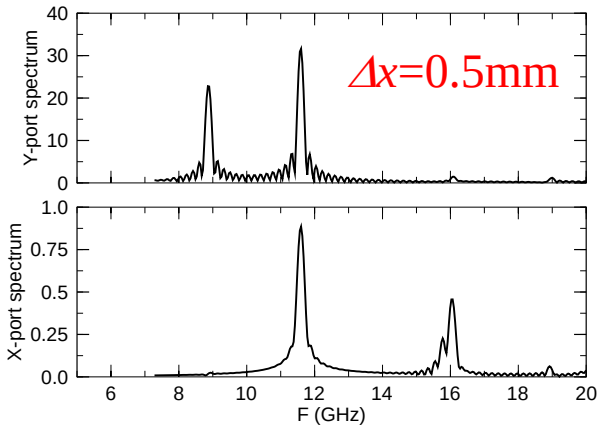

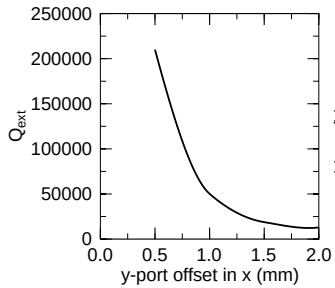

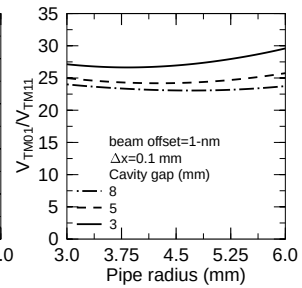

TM_{01}/TM_{11} signal ratio is about 25 for Δx=100μm, 1nm beam offset

Δr misalignment

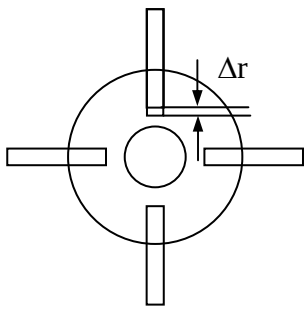

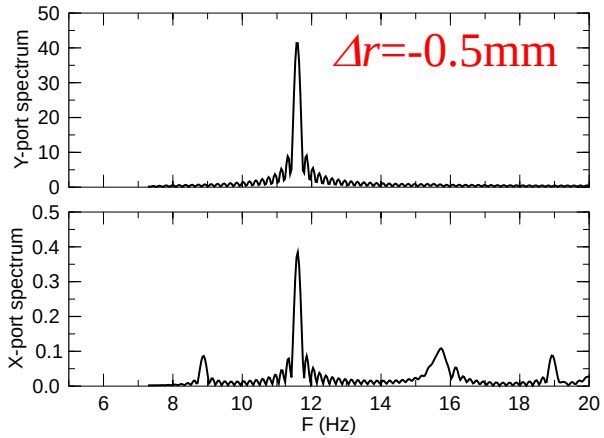

- For a misalignment in Δx of 100μm, one can achieve resolution near thermal noise limit of about 0.1nm with modern electronics.
- Tolerance on Δr Significant looser than on $\Delta x/\Delta\theta$.

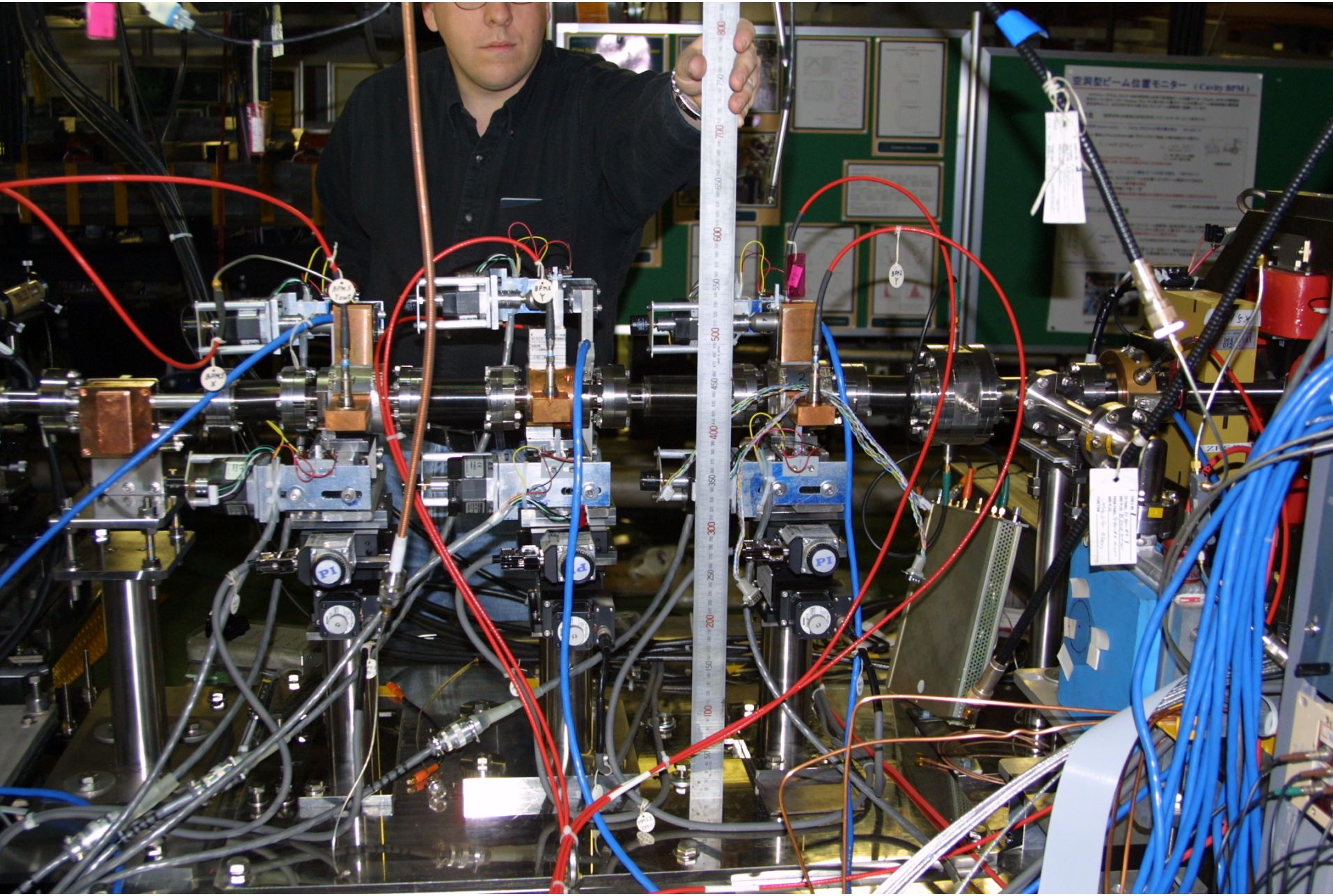
空洞型ビーム位置モニター（Cavity BPM）

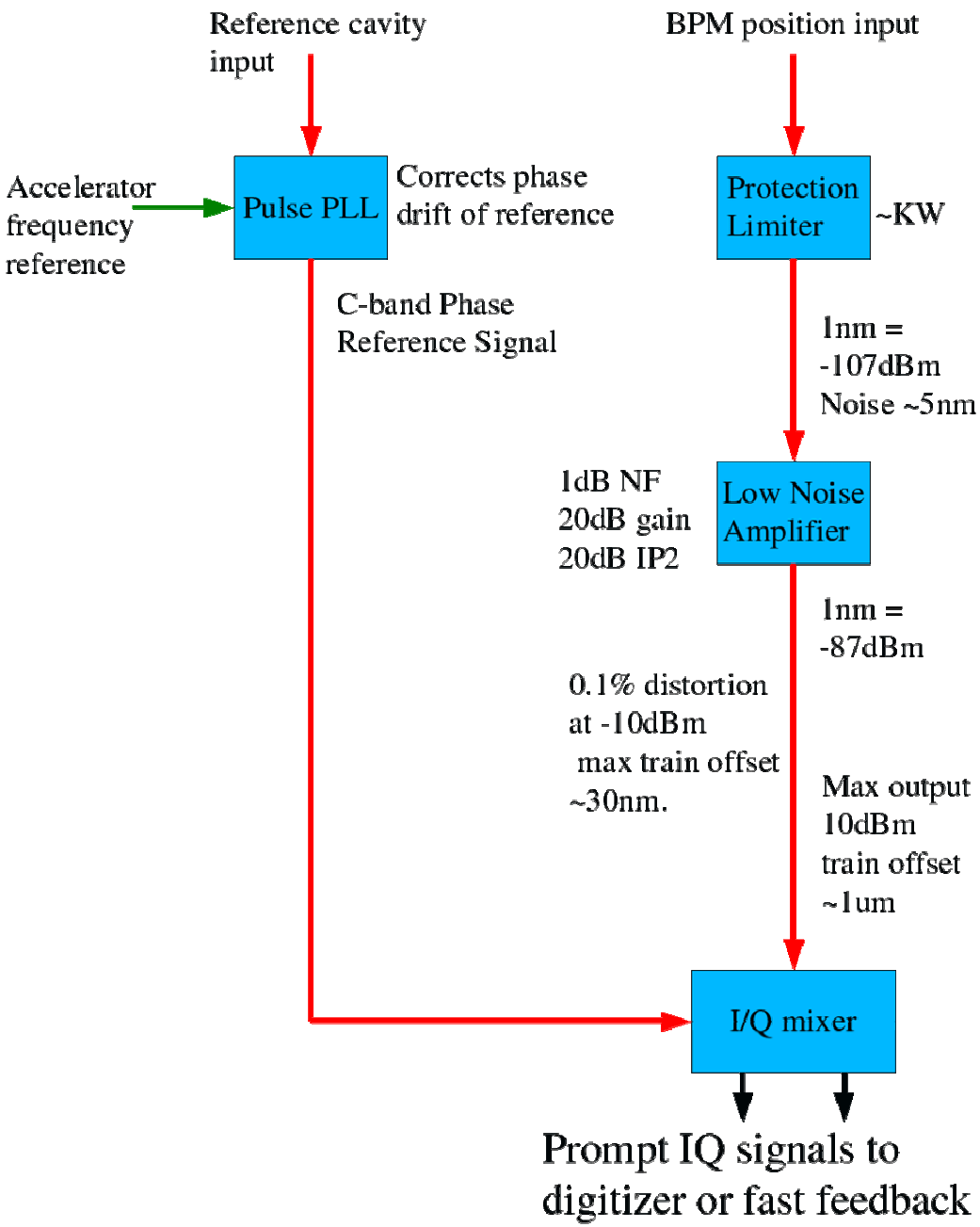

With C-band cavity, 357MHz, Best "conventional" electronics:

~5nm resolution, 1um maximum train offset

With 30GHz cavities, resolution ~1nm, but maximum train offset ~200nm

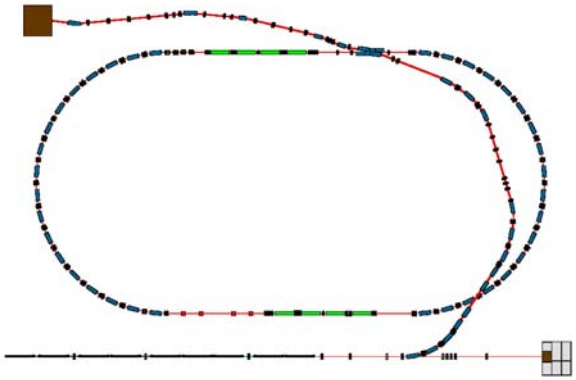

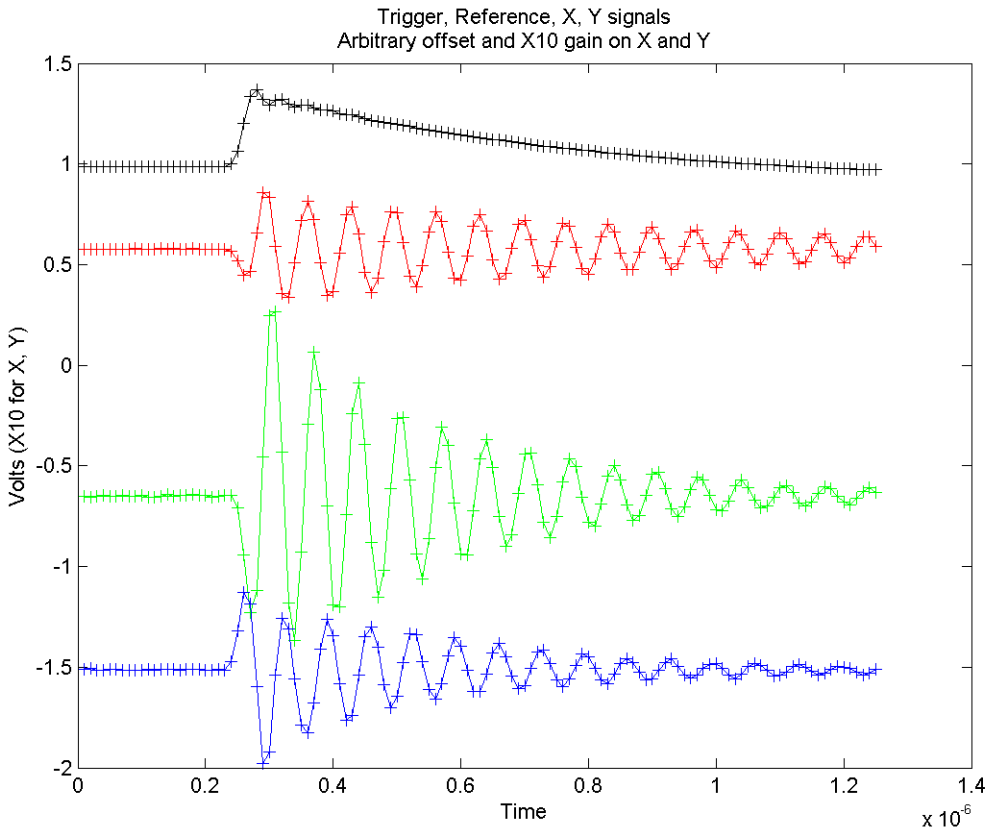
Trigger, Reference, X, Y signals
Arbitrary offset and X10 gain on X and Y
Volts (X10 for X, Y)
Time
x 10^-6
1.5
1
0.5
0
-0.5
-1
-1.5
-2
0
0.2
0.4
0.6
0.8
1
1.2
1.4

Raw signals

Mark Cooke - UCB

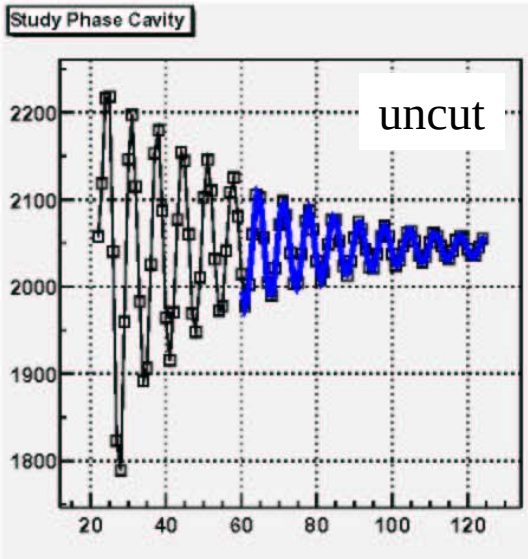

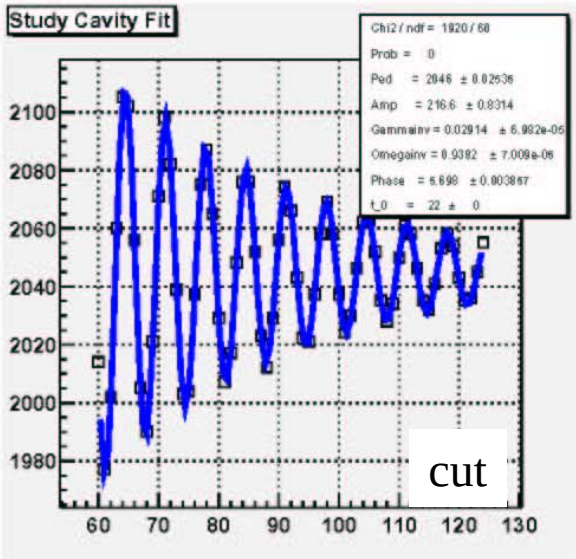

Signal fits using root

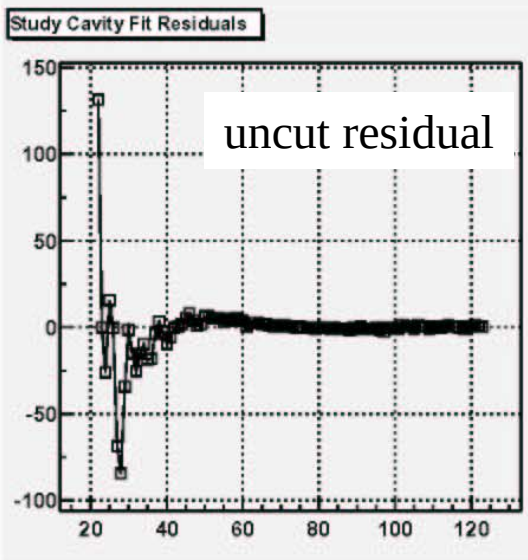

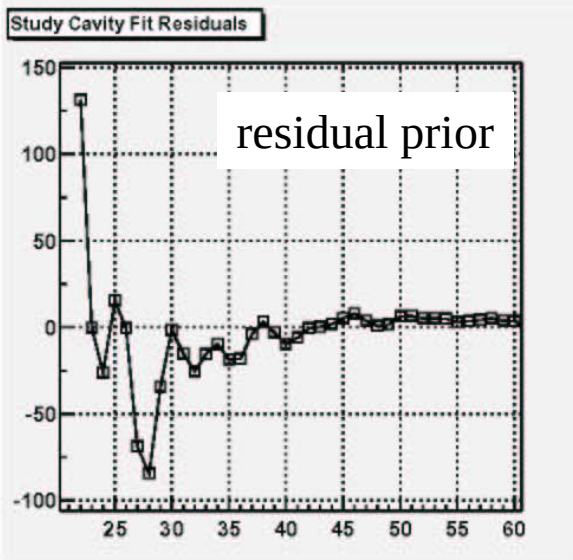

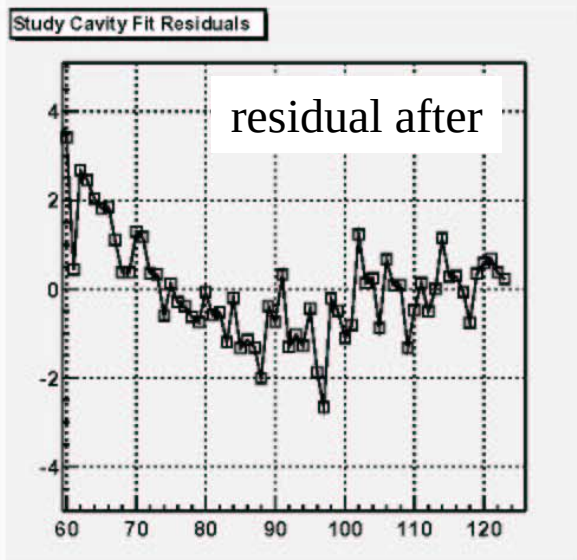

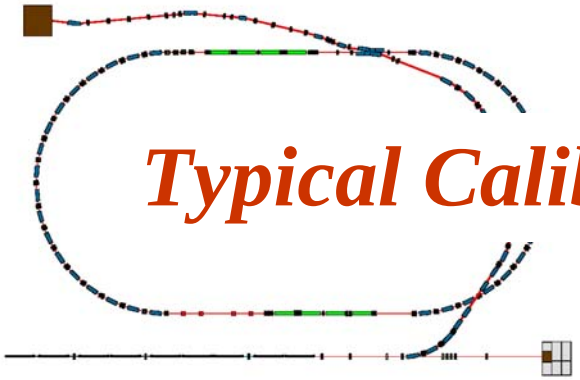

Typical Calibration – MM5X y

Readings from BPM1 as its mover is adjusted: 32 ATF pulses x ~10 mover settings superimposed. *320 ATF pulses in total.*

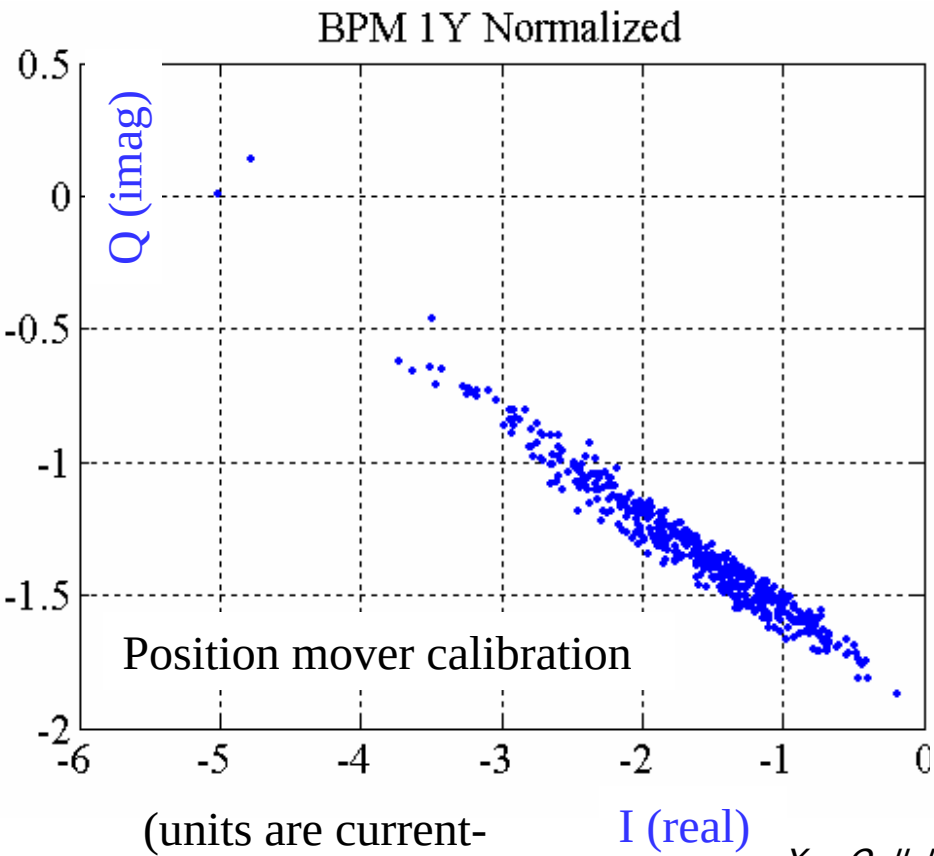

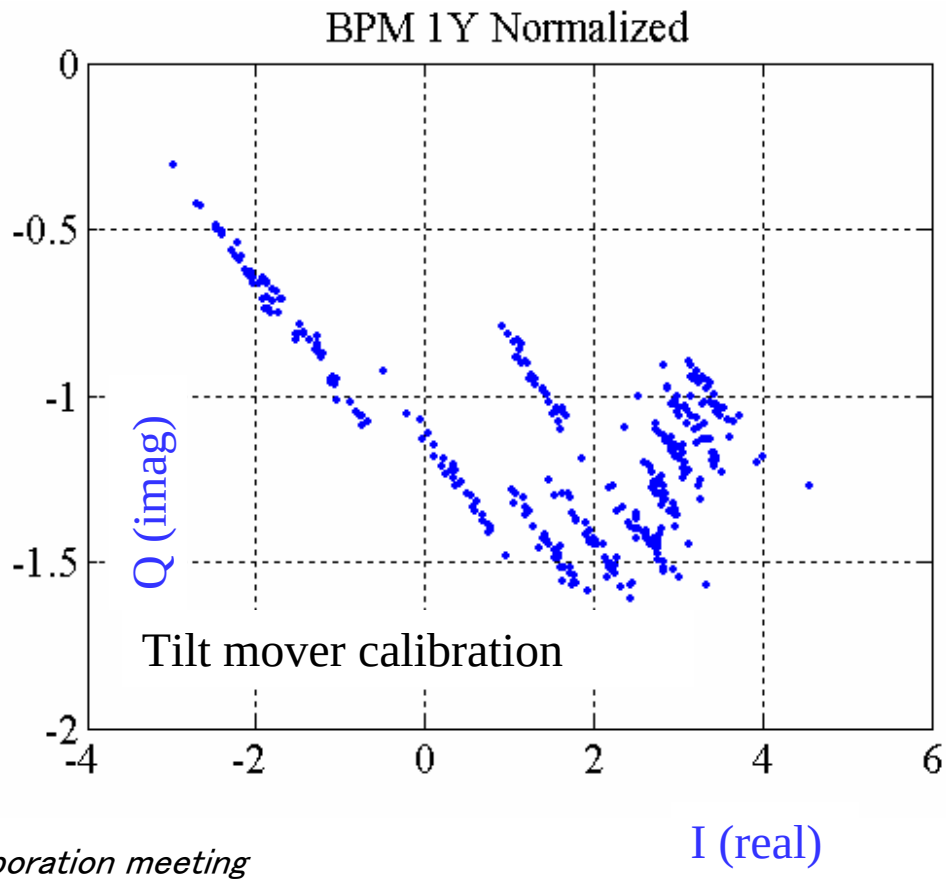

(units are current-normalized ADC counts)

Typical Calibration – MM5X y (2)

Average I/Q BPM1 data as its mover is adjusted vs mover setting: 32 ATF pulses x ~13 mover settings superimposed. *320 ATF pulses in total.*

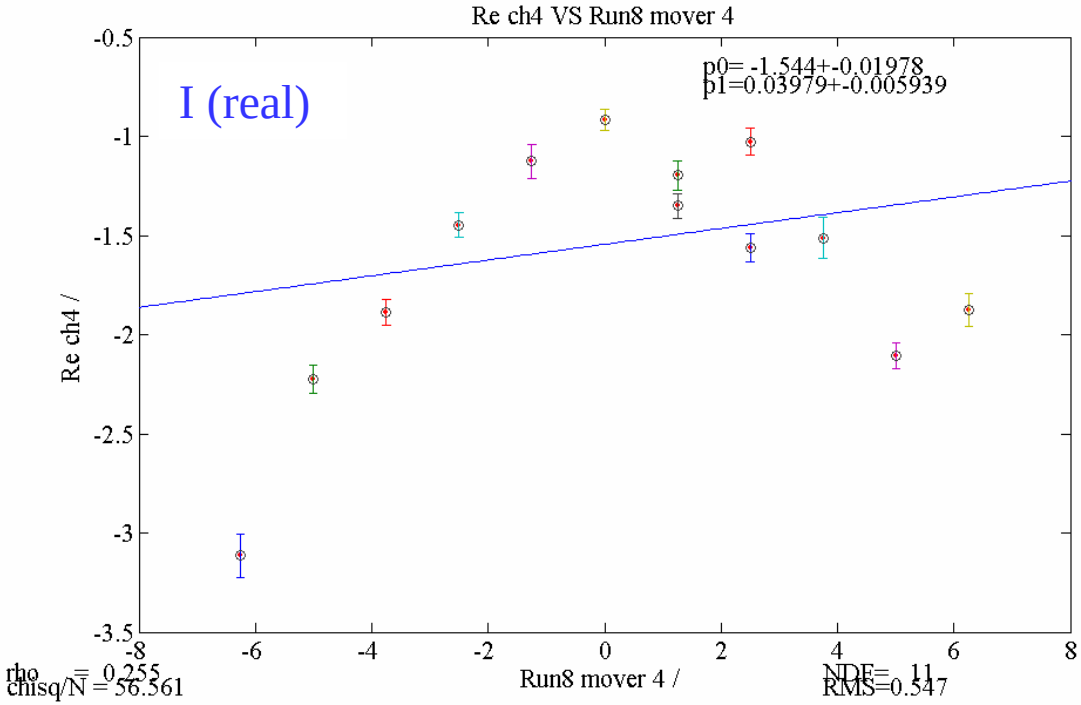

Mover - um

Position mover calibration

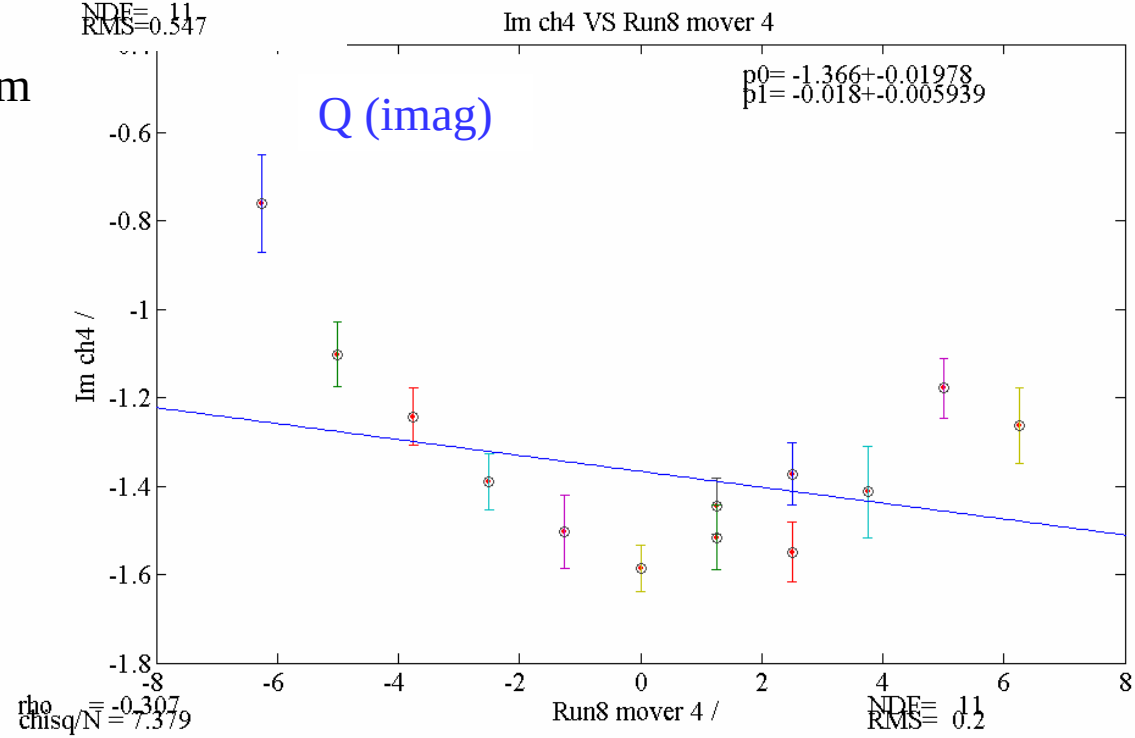

IS

Typical Calibration – MM5X y' (3)

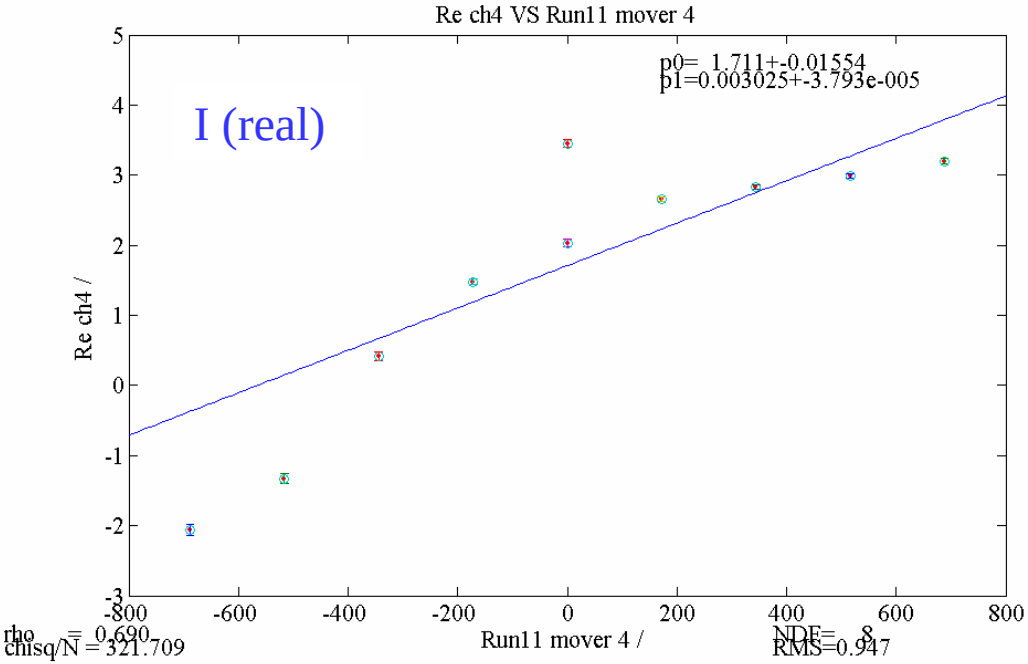

Mover - urad

Average I/Q BPM1 data as its mover is adjusted vs mover setting: 32 ATF pulses x ~13 mover settings superimposed. *320 ATF pulses in total.*

Tilt mover calibration

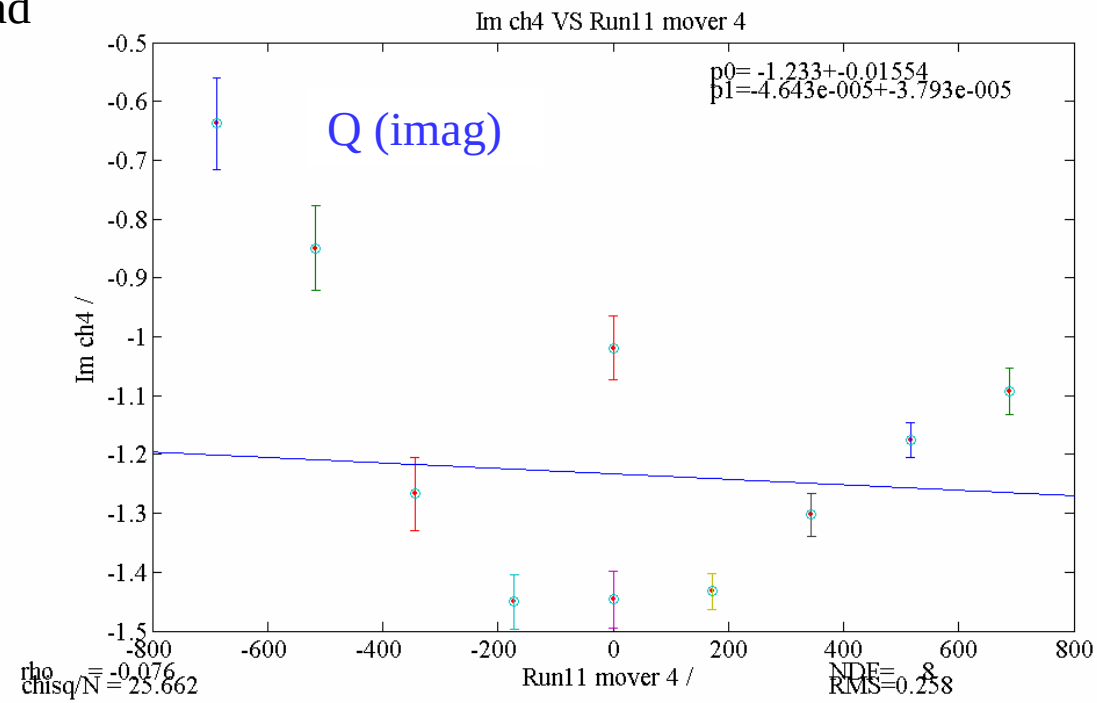

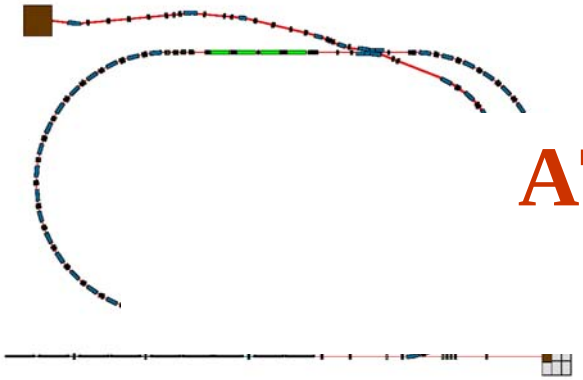

ATF Beam instabilities

- Initial tiltmeter tests were in a more favorable location (lower beta 3x)
- Slow – few minute period, 5um (y) amplitude
  - annoyingly similar to time for calibration
- Fast – pulse to pulse 1 um
- Fliers

- With:
  - Better resolution on existing 13 extraction line BPM's
  - Readout integration with cavity BPMs
  - Connection to other diagnostic signals (temp)

- Should be able to pinpoint instability sources AND THEN FIX THEM

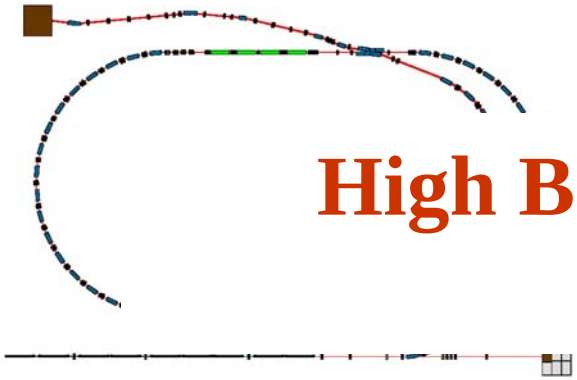

High Bandwidth Cavity BPMs for Multibunch

- Can imagine building a low Q cavity.
  - Strong coupling difficult
  - Fundamental mode overlap problem increases.
- Can look at signals from standard cavity BPM with higher bandwidth electronics.
- Integration time of 3ns vs ~300ns causes a loss of X10 in resolution.
- Since bunches add coherently, train offsets or tilts can generate very large signals.

Simulated Multibunch Signals

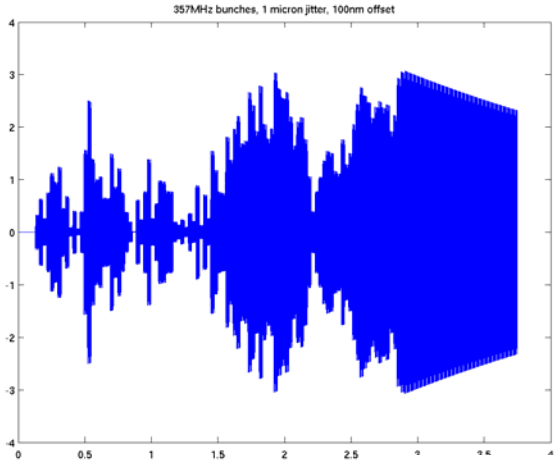

1um bunch noise
100nm train offset

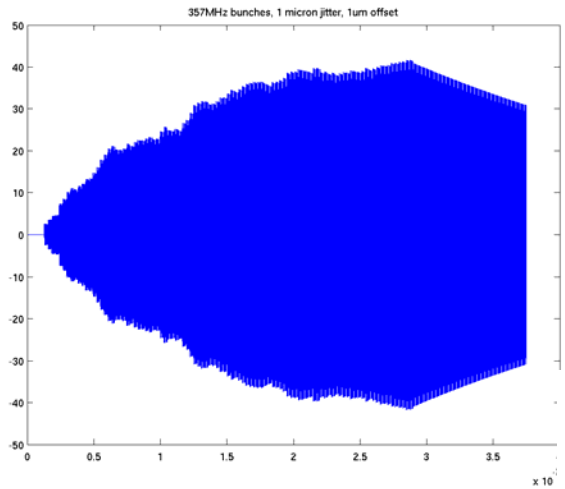

1um bunch noise
1um train offset

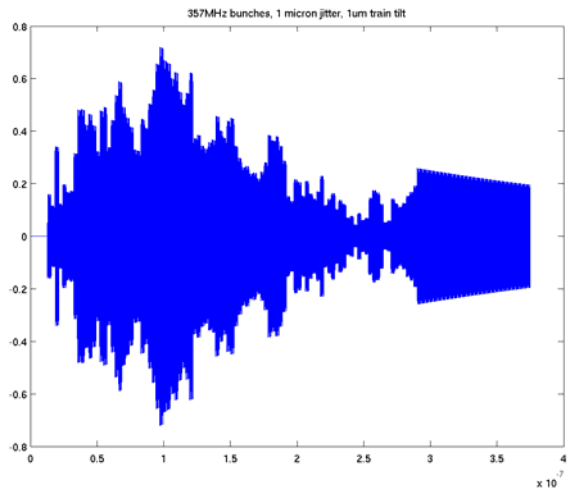

1um bunch noise
1um train tilt

New Injection/Extraction scheme 2

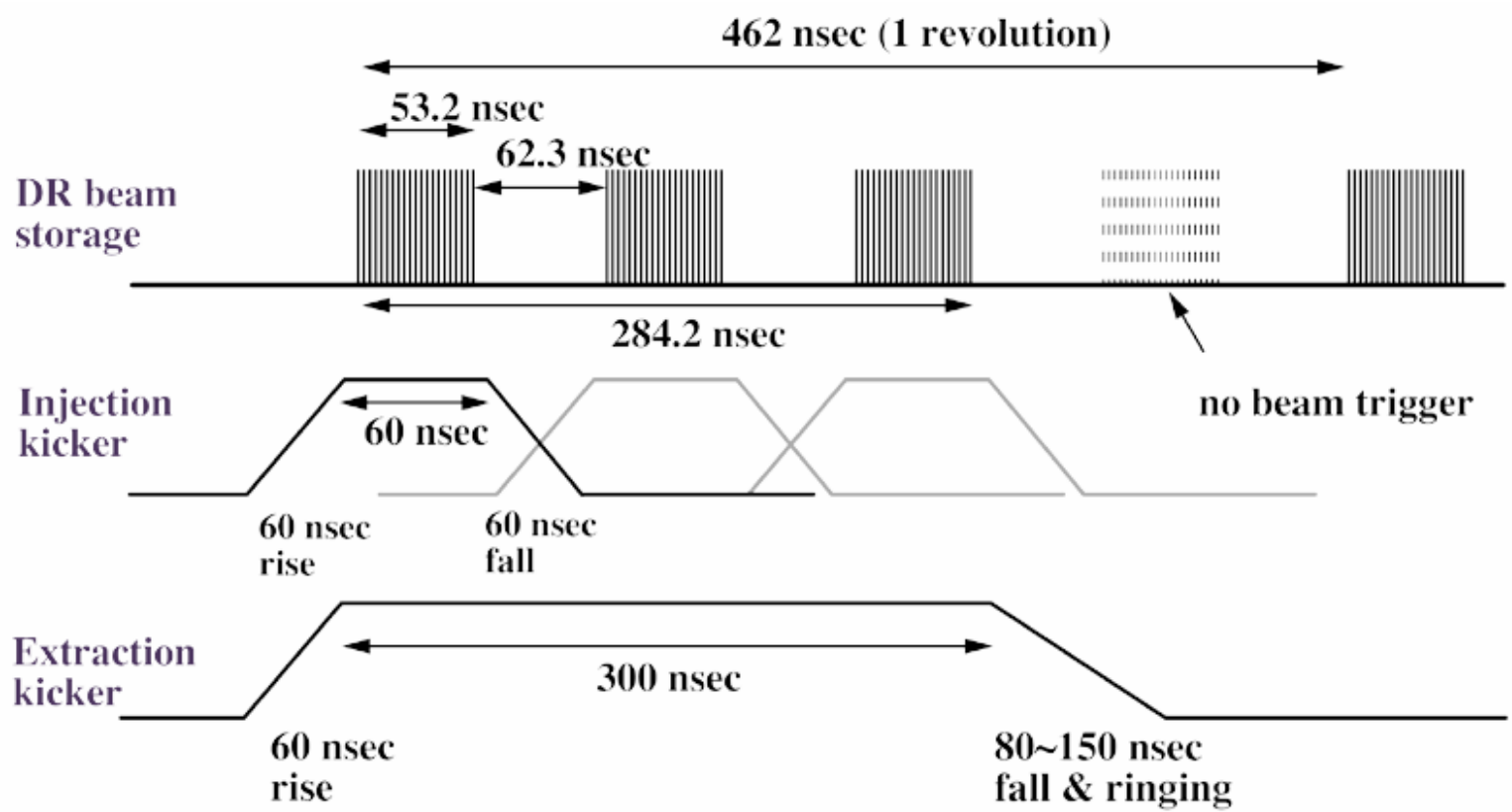

Pulse Length of EXT kicker: 60ns -> 300ns

(PFL cable Length: 13m -> 37m)