FEEDBACK ON NANOSECOND TIMESCALES (FONT) RESULTS FROM FIRST BEAM TESTS AT SLAC

C. Adolphsen[3], P.N. Burrows[2], J. Frisch[3], K. Jobe[3], S. Jolly[1], T.W. Markiewicz[3], D. McCormick[3], G. Myatt[2], J. Nelson[3], G. Nesom[2], C. Perry[2], M. Ross[3], S. Smith[3], T. Smith[3], G.R. White[2]

1: Oxford University

2: Queen Mary, University of London

3: Stanford Linear Accelerator Center

P.N. Burrows

Queen Mary, University of London

- **Linear Collider luminosity**
- **Beam-based intra-train feedback**
- **FONT1 prototype experiment at NLCTA**
- **Results and plans**

THE LINEAR COLLIDER LUMINOSITY CHALLENGE

Machine	E (GeV)	$\mathcal{L}$ (/cm^2/s)	x size (nm)	y size (nm)
SLC	100	10^{30}	1400	600
TESLA	500	3×10^{34}	550	5
N/JLC	500	2×10^{34}	240	3
CLIC	3000	10^{35}	60	1

$\Rightarrow$ **Next-generation machines need to collide nanometre-sized beams**

LUMINOSITY LOSS DUE TO BEAM OFFSET

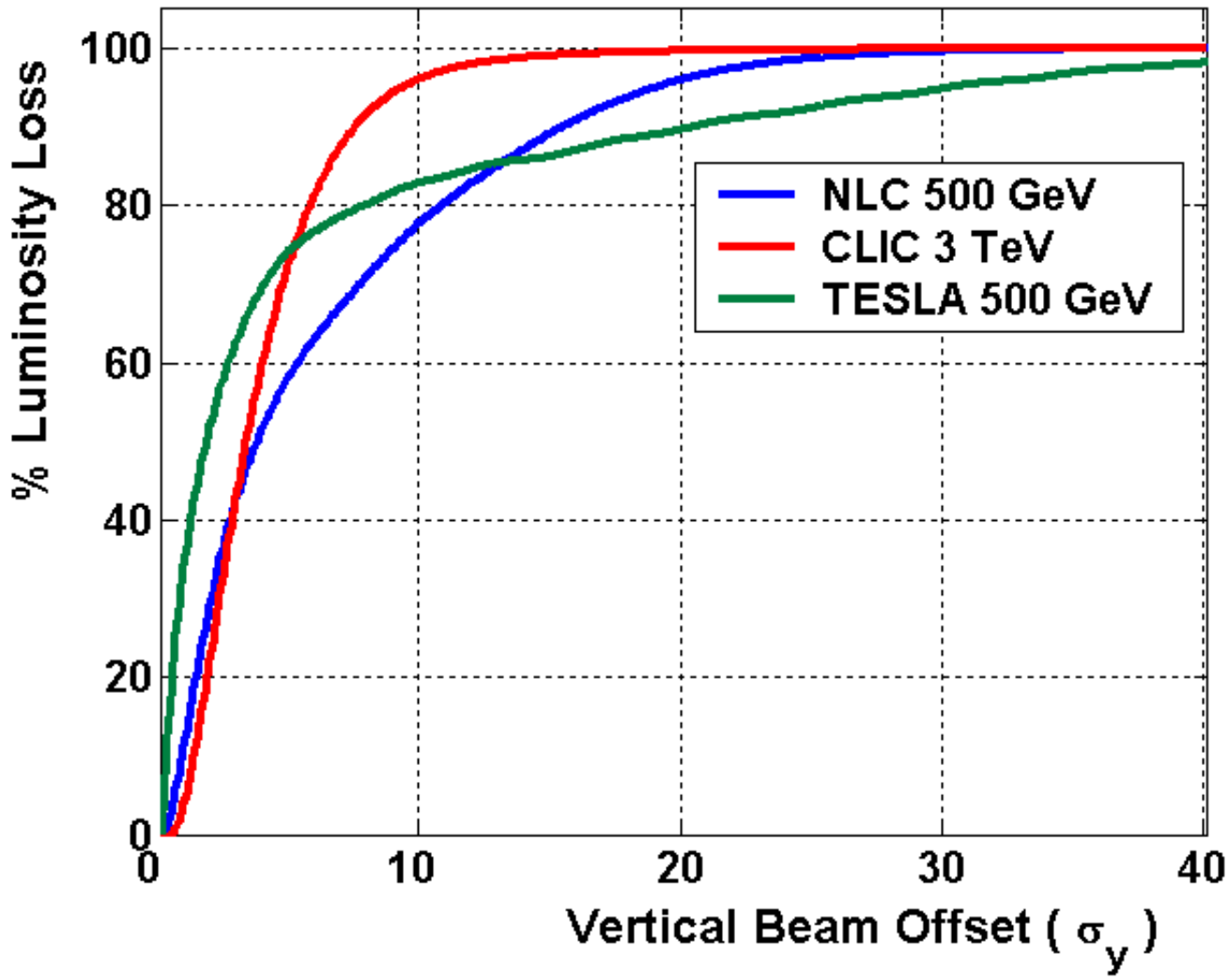

To achieve $> 20\%$ $\mathcal{L}_0$ must stabilise beams to:

$<$ 40 nm (TESLA)

$<$ 30 nm (J/NLC)

$<$ 5 nm (CLIC)

To achieve $> 90\%$ $\mathcal{L}_0$ must stabilise to a few nm

FAST INTRA-TRAIN FEEDBACK

- **Correct offset within each bunchtrain**

- **Bunchtrain time structure:**

Machine	Δt (ns)	# bunches	train length	f (Hz)
J/NLC	1.4	192	270ns	120
CLIC	0.67	154	100ns	100
TESLA	337	2820	1ms	5

- **Require system latency $\ll$ train length**

  $\Rightarrow$ **Feedback On Nanosecond Timescales (FONT)**

- **1ns $\equiv$ 1 foot**

$\Rightarrow$ **compact system very close to IP**

analogue electronics (J/NLC, CLIC)

LAYOUT OF FONT SYSTEM: IR WITH CROSSING ANGLE (JLC, NLC, CLIC)

(Draft design exists for TESLA)

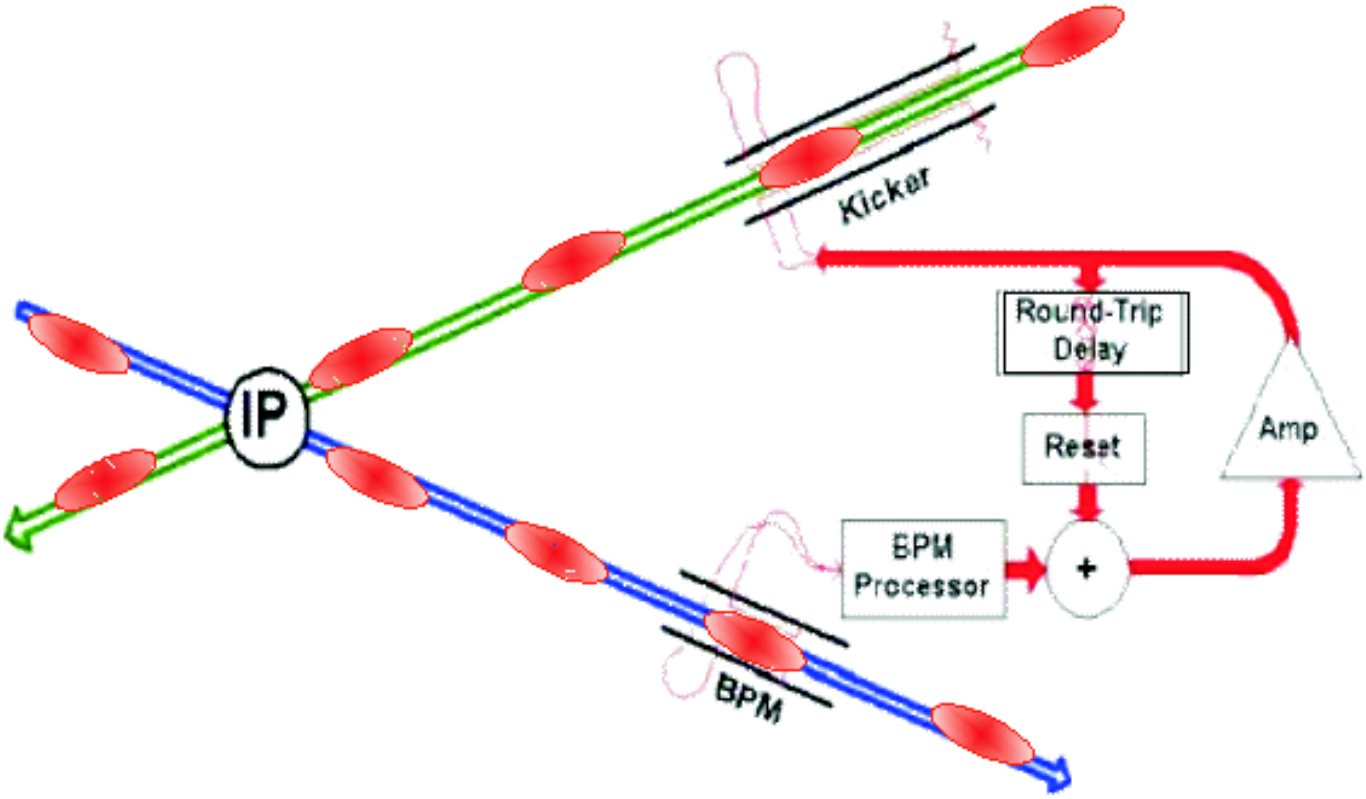

FEEDBACK MODEL

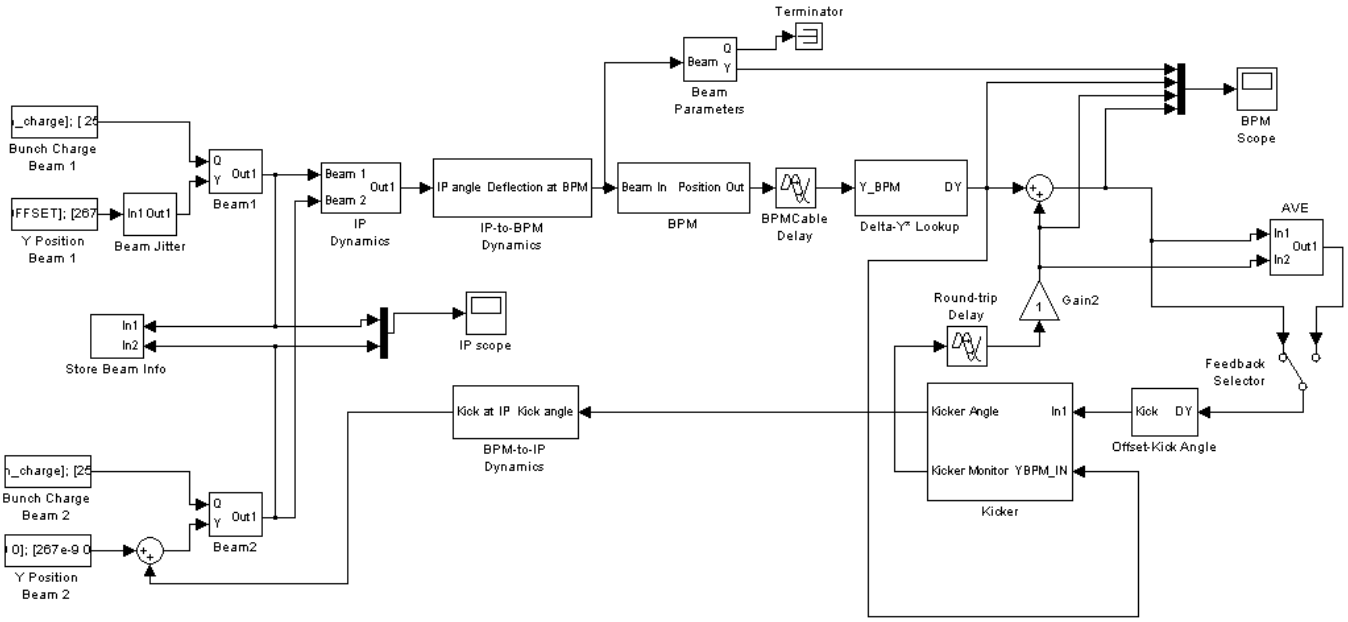

Includes:

- Signal propagation delays
- BPM parameters + response time
- Kicker parameters + response time
- Feedback algorithm

FONT PERFORMANCE (NLC, z = 4m): THE OFFSET-GAIN PLANE

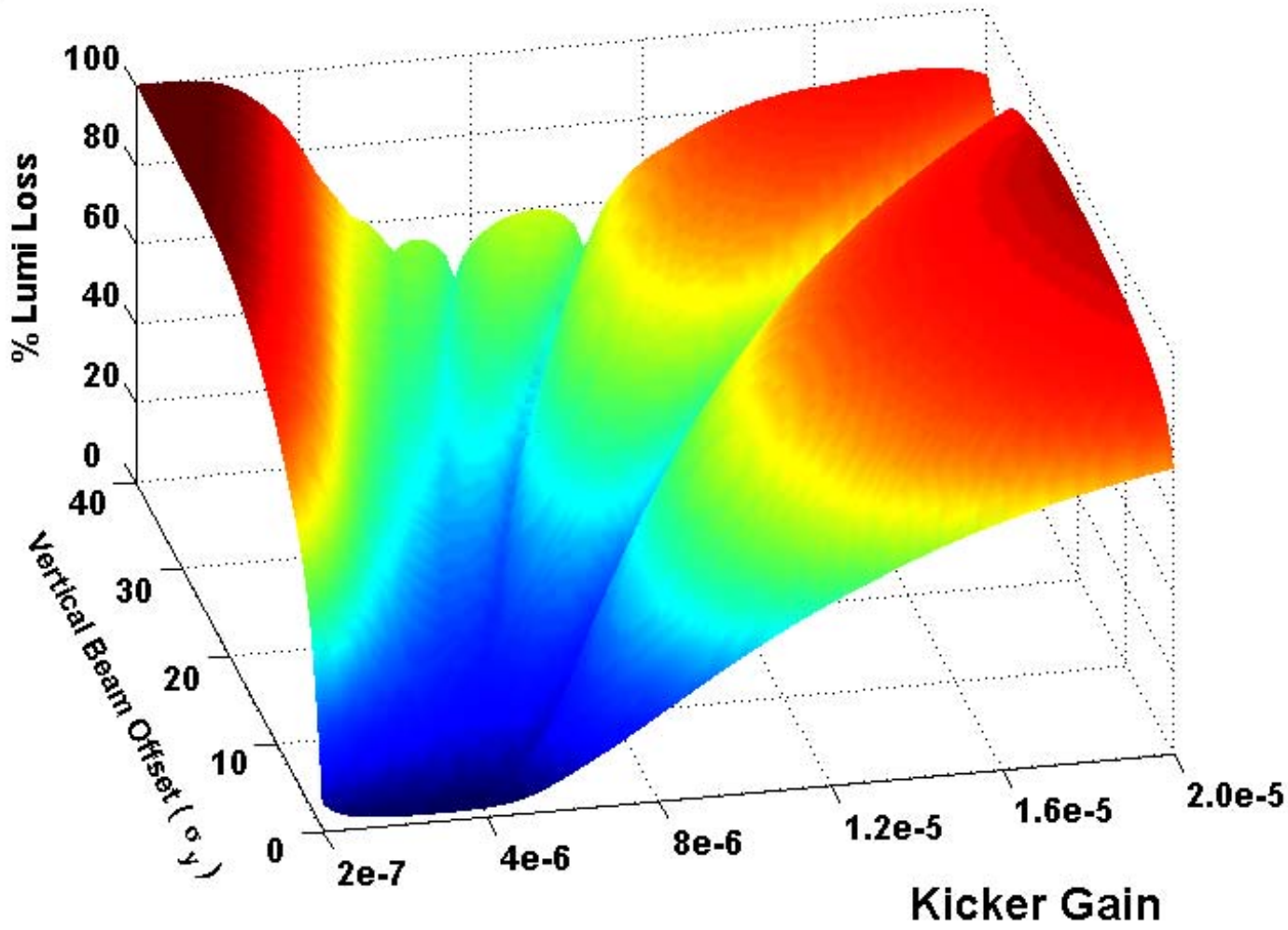

Choice of gain critical:

too low ⇒ correction too slow

too high ⇒ system oscillates

⇒ Significant luminosity loss

FONT1 @ SLAC NLCTA

- Utilise 170 ns-long e^- bunchtrain
- Introduce position offset w. dipole
- Detect offset of early bunches w. BPM
- Calculate and feedback correction signal
- Correct offset of later bunches w. kicker

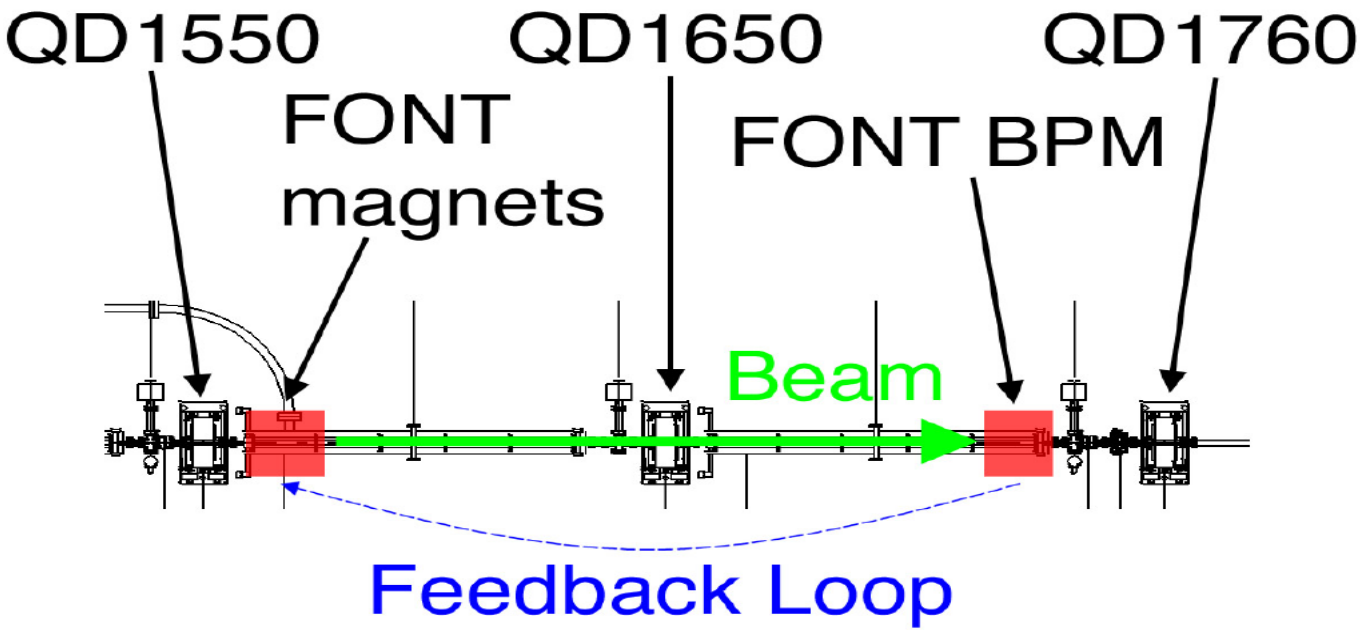

- kicker $\leftrightarrow$ BPM separation: $\Delta z \simeq 4$m

similar signal propagation delays as LC

FONT1 BEAMLINE COMPONENTS

SLC type 4 linac corrector + post-damping ring kicker:

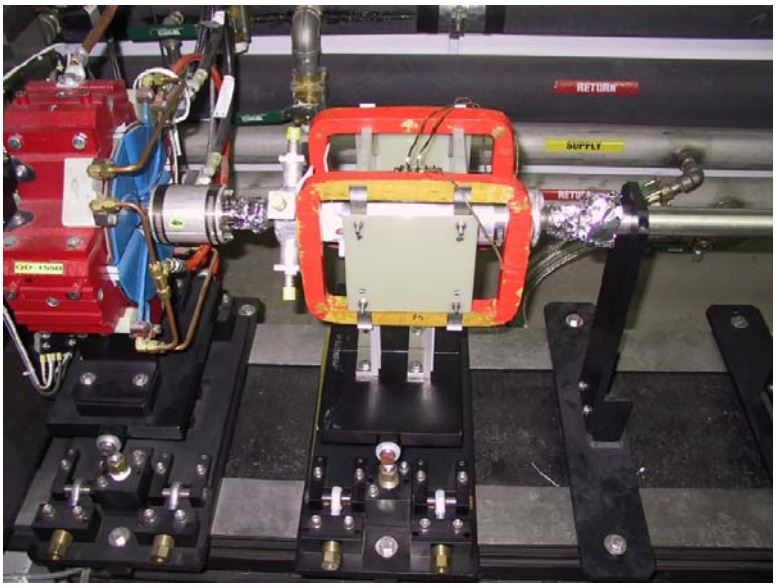

$\Rightarrow \pm 5$ mm offset at FB BPM

New X-band 'button' BPM:

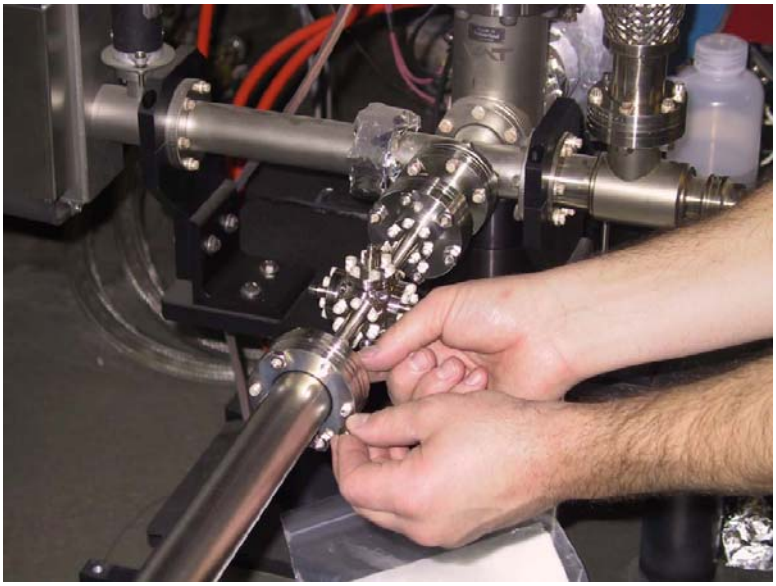

$\Rightarrow$ linear $|y| \leq 3$ mm, resolution $\sim 10\ \mu$m

FONT1 BPM READOUT

Schematic:

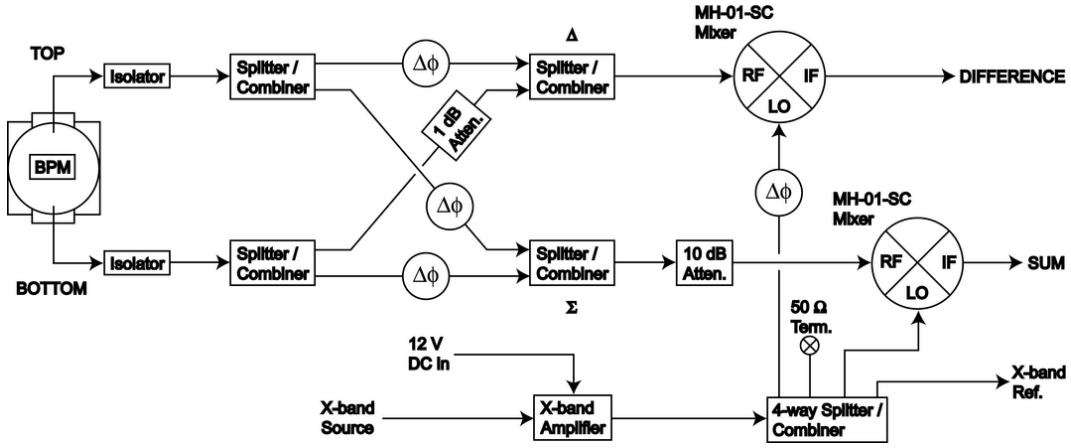

⇒ mix Σ and Δ of X-band signals to baseband

Realisation:

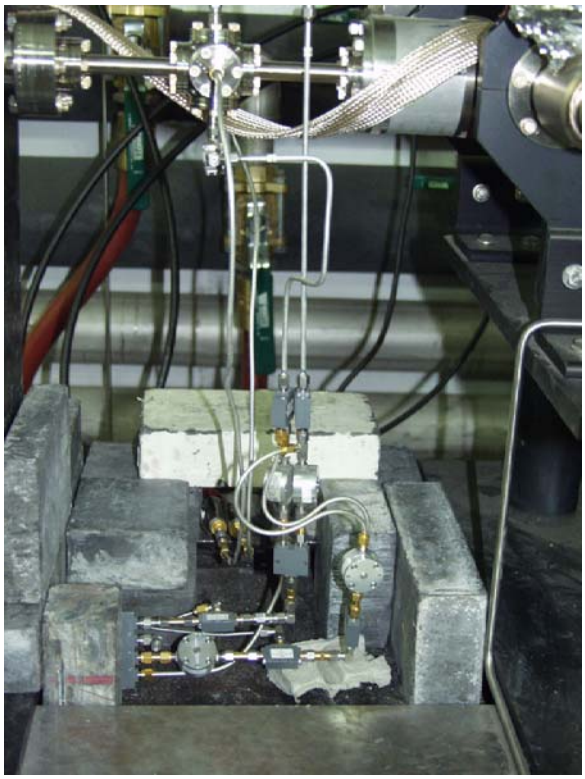

⇒ Σ and Δ of y-pickoff signals → normaliser/FB circuit

CHARGE NORMALISATION AND FB

Normaliser: divide $\Delta/\Sigma \rightarrow$ y

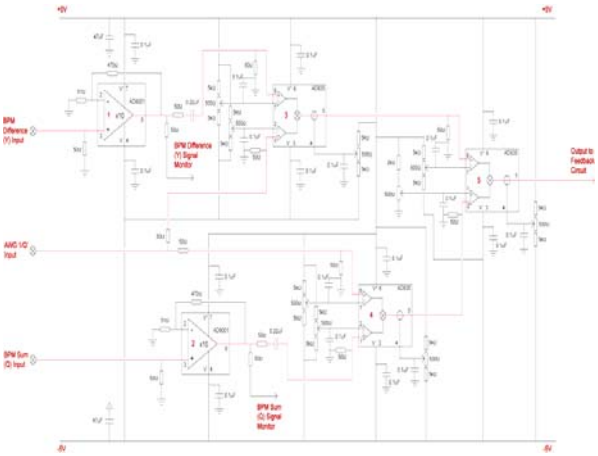

FB + delay loop

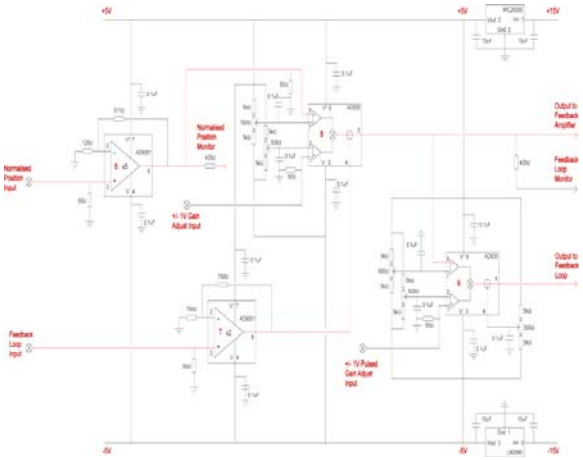

Realisation:

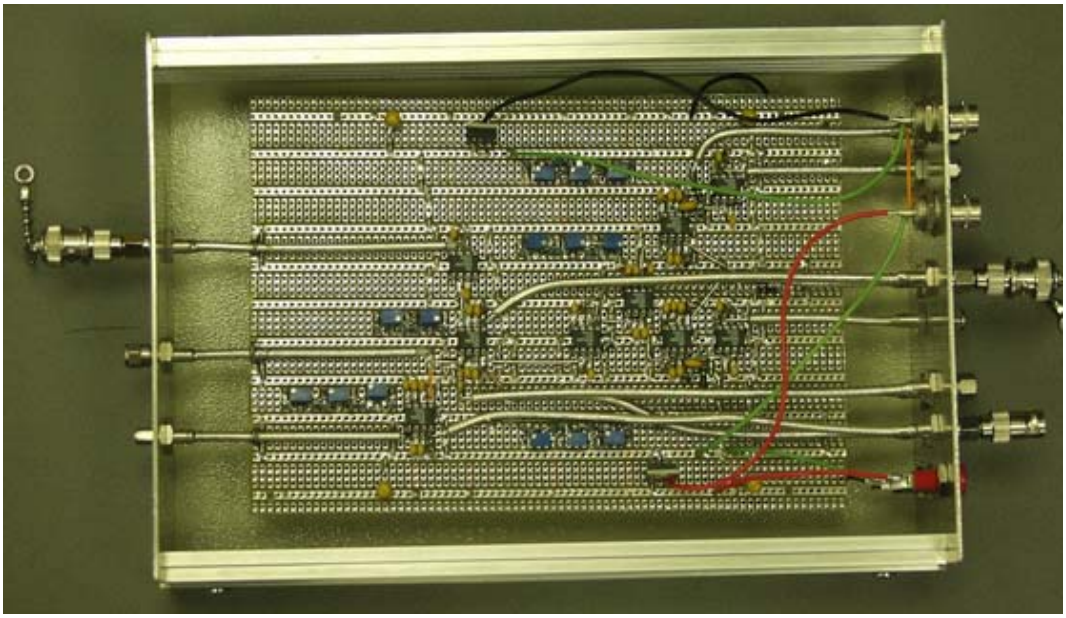

$\Rightarrow$ output to kicker amplifier

KICKER DRIVER AMPLIFIER

3-stage planar triode tube amplifier:

$\Rightarrow \quad |I| \leq$ **7.5A** $\quad |V| \leq$ **350V** $\quad$ **P** $\leq$ **3kW**

Amplifier installed in beamline:

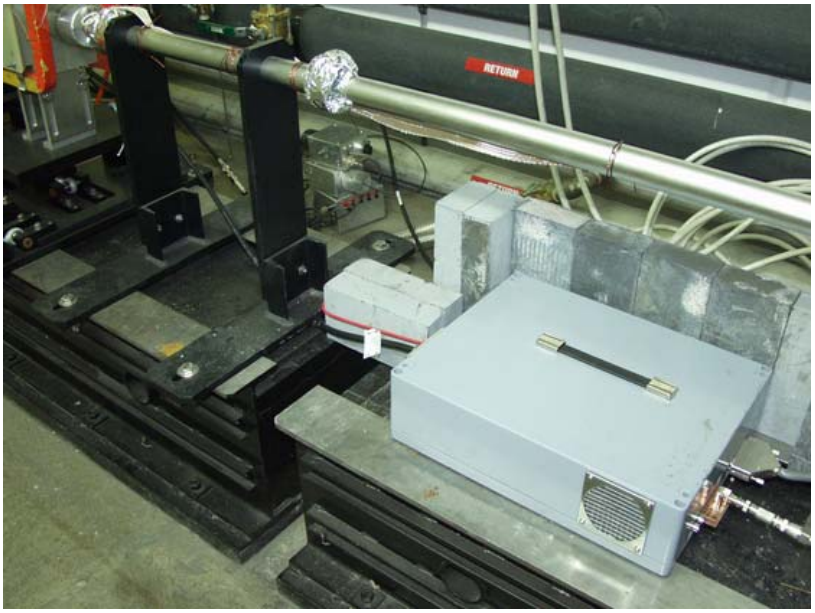

$\Rightarrow$ **kick displaced beam by $\pm$ 1mm at FB BPM**

FONT1 EXPECTED LATENCY

Signal propagation:

beam flight time kicker → BPM	14 ns
signal return cable delays	18 ns
• Total 'irreducible' latency	32 ns

Electronics:

BPM	5 ns
preamplifier	5 ns
normalisation/FB circuit	11 ns
amplifier	10 ns
kicker fill time	2 ns
• Total electronics	33 ns

• Total calculated latency	65 ns

FONT1 RESULTS

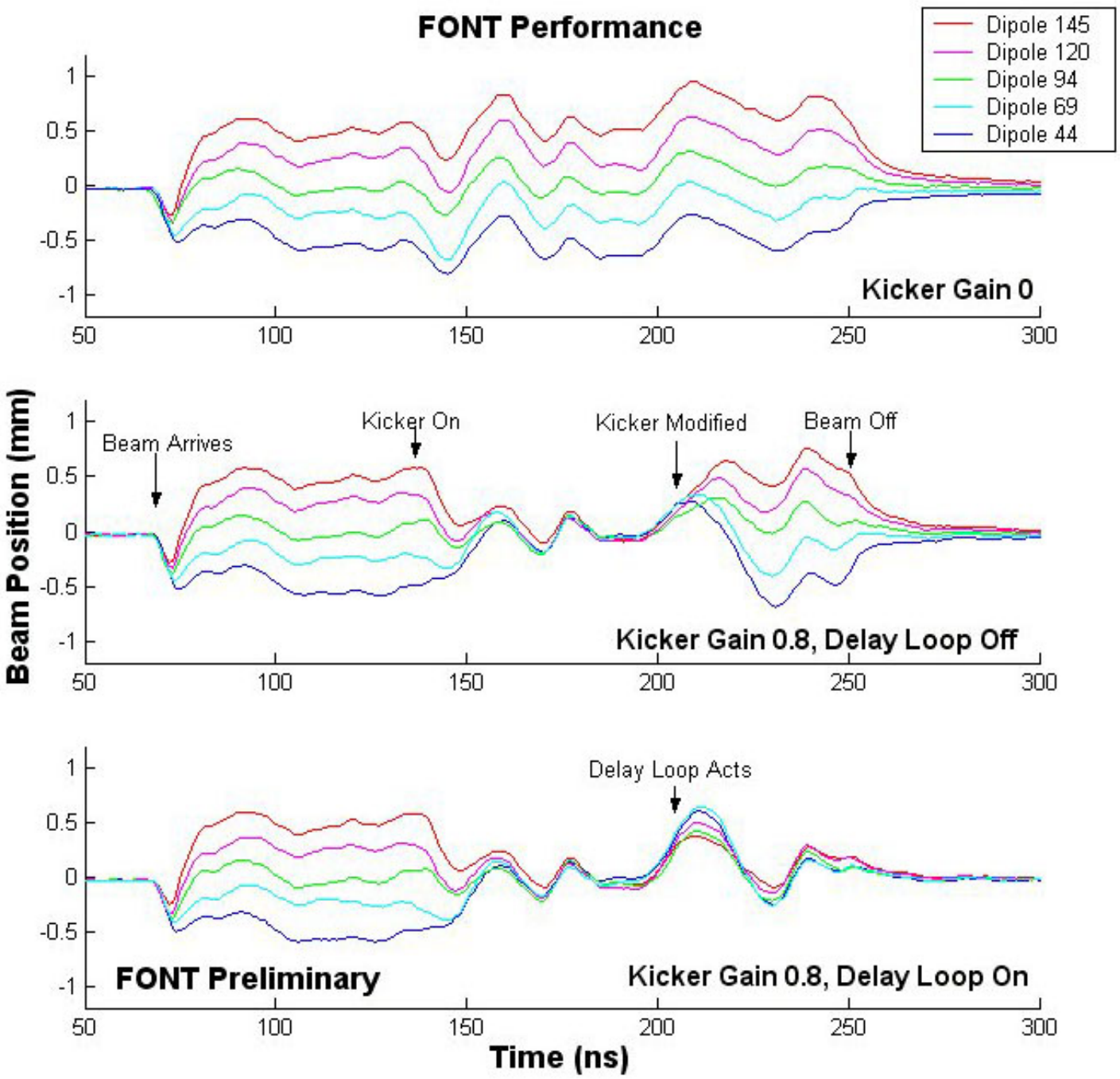

Worked as designed:

10/1 correction w. latency of 66 ns

SUMMARY + PLANS

- **Successfully run FONT1:**

  ⇒ demonstrated feed-forward, and single-pass delay-loop feedback, control of electron beam with latency of 66ns

- **Preparing improved FONT2:**

Add 2 witness BPMs:

beam tracking independent of FB BPM

⇒ true demonstration of position FB

Reduce latency 66 → 40 ns:

optimised electronics (save 10ns?)

shorten kicker ↔ BPM Δz (save 16ns)

⇒ $2 + \epsilon$ passes round delay loop

Improved amplifier performance:

tube → solid state amplifier

⇒ actual LC technology

Add 'beam flattener':

include −ve position signal in FB

⇒ remove high-frequency wiggles