Tentative report of radiation dose rate estimation for

Shielding cover on access shaft over the IR hall

and

Wall between detectors

RP T.Sanami and A.Fasso

2006年9月12日

Issues

(Based on L.Keller Memorandum Aug/28/2006)

1. Shielding cover on access shaft over the IR hall
   - We need to determine if the 15m diameter access shaft has to be covered by a concrete plug when the machine is operating. Since the normal operating beam losses in the hall are very small, this will be determined by the accident case when the full beam hits material in the beam line. From earlier work by Fasso, we expect no shielding cover is needed, but it must be checked. An analytic estimate will probably surface.

2. Wall between detectors
   - Since it is difficult to extend this wall higher than the crane hook, we would like to know if a “curtain” wall is needed like in IR-2 at PEP-II. Previous work by Fasso for the accident case has shown that the wall should be 2.5-3.0 m thick for direct penetration of neutrons. Now the model needs to be extended to see if a gap between the top of the wall and the ceiling of the cavern allows too many neutrons with the one bounce to violate the 25R/hr limit for people at various heights behind the wall

Geometries

(Based on exphall060821.pdf)

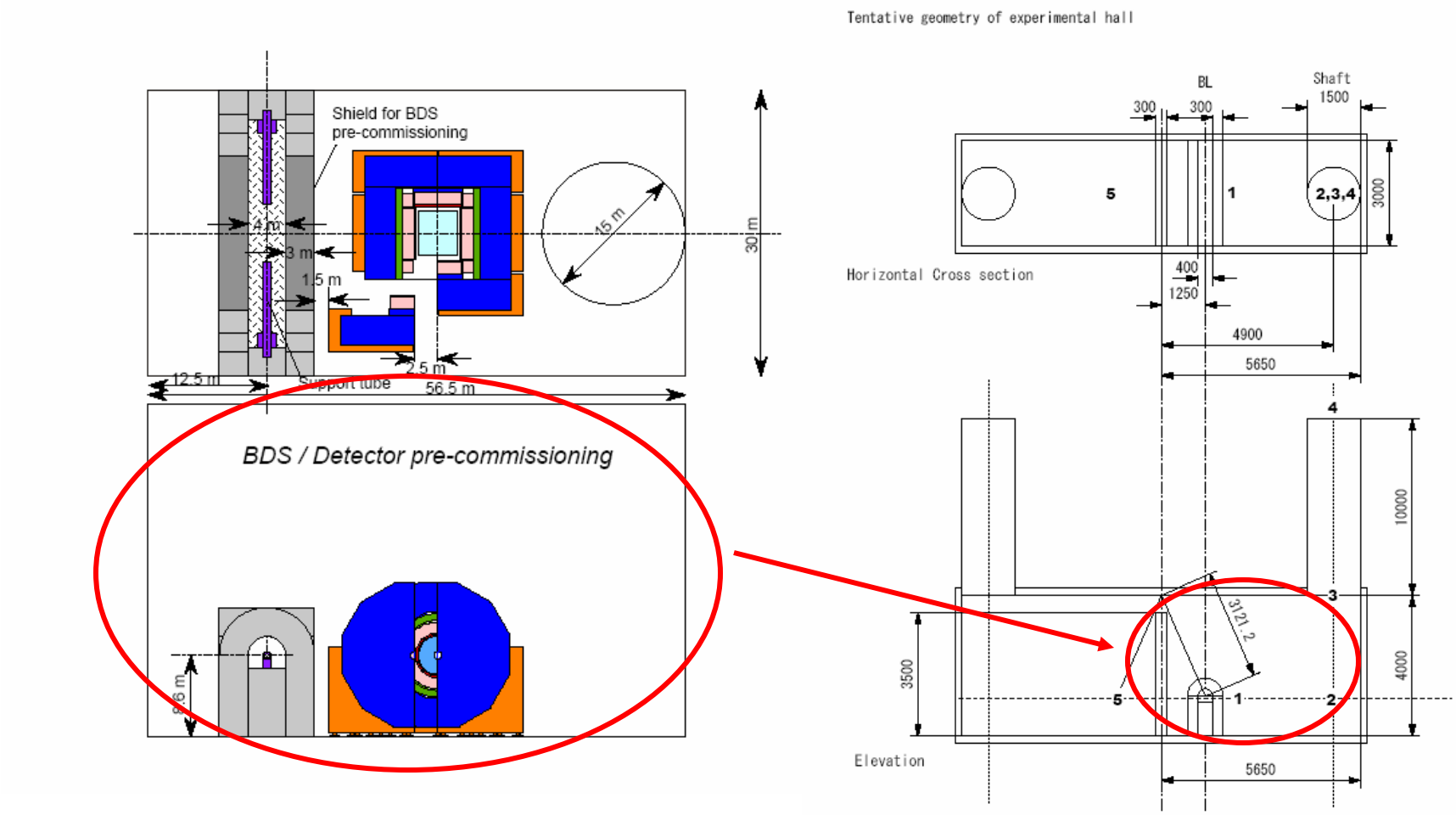

Assumption : Hall height (4000), Crane clearance (500), Wall thickness (200)

Tools

1. SHIELD11 code
   - SLAC-R-737, UC-414 (E/A) by W.R.Nelson and T.M.Jenkins
   - Analytic expressions

2. MARS code
   - Fermilab-conf-04/053(2004) by N.V.Mokhov
   - Monte-Carlo-code

Issue 1

1. SHIELD11 code
    1. Calculate dose at point 2
    2. Calculate dose at point 4 by using attenuation curve of streaming

2. MARS code
    1. Make full geometries which divided to four layers
    2. Step by step calculation for each layer

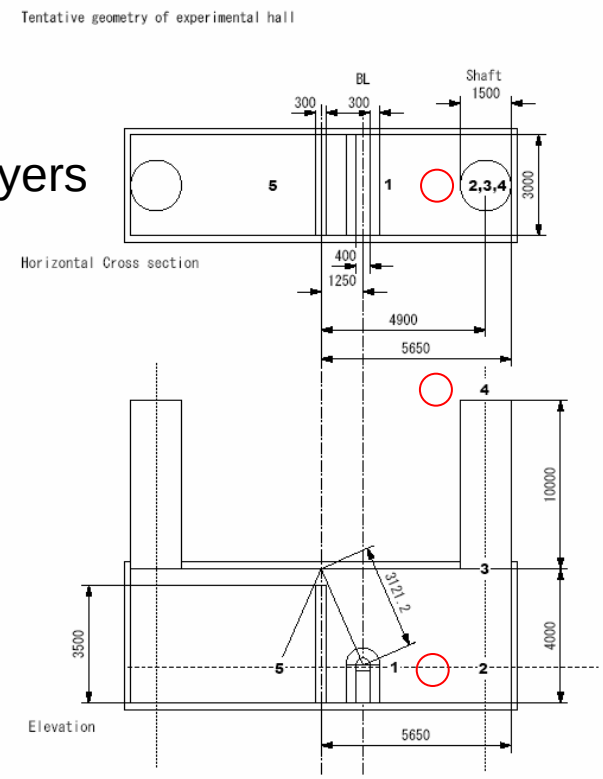

Issue 1

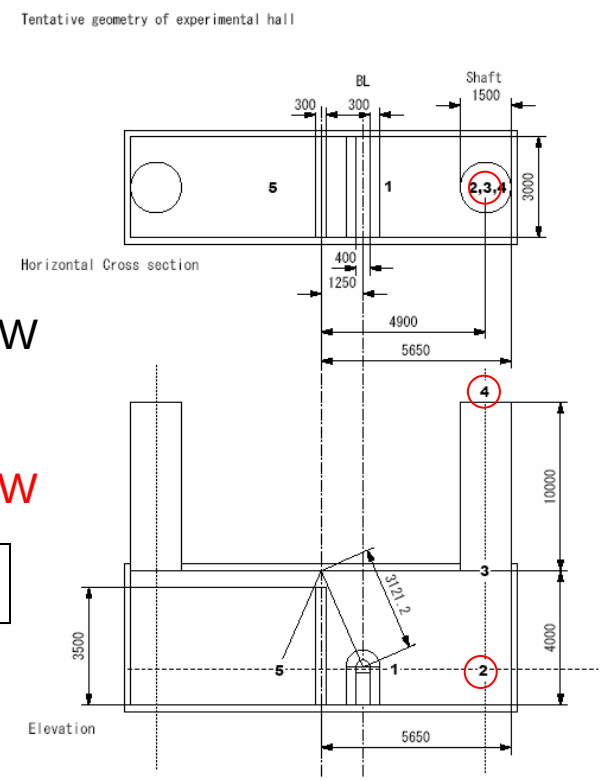

1. SHIELD11 code

At point 2 with beam line shield

GRN	MID	HEN	Neutron	
.99750E-24	.10094E-19	.10575E-17	.10676E-17	rem/e
.44888E-10	.45424E-06	.47588E-04	.48042E-04	rem/h/kW
GamD	GamI	Gamma	TOTAL	
.20590E-20	.28236E-18	.28442E-18	.13520E-17	rem/e
.92653E-07	.12706E-04	.12799E-04	.60841E-04	rem/h/kW

⇨ 1.10 rem/h @ 18MW

At point 2 without beam line shield

GRN	MID	HEN	Neutron	
.15994E-13	.37192E-14	.37631E-15	.20089E-13	rem/e
.71972	.16737	.16934E-01	.90402	rem/h/kW
GamD	GamI	Gamma	TOTAL	
.40083E-13	.10047E-15	.40183E-13	.60272E-13	rem/e
1.8037	.45214E-02	1.8082	2.7123	rem/h/kW

⇨ 48821 rem/h @ 18MW

For shaft attenuation (IAEA Tech. Rep. No.283, R.Thomas and G.Stevenson, p276 fig. 4.39)

d/sqrt(A) = 100/sqrt(176.7) = 7.52 → Att fac. = 6E-4

At point 4, W shield : 0.6mrem/h, W/O shield : 29.3 rem/h

MARS : Parameters

- Target :
  - Cu cylinder 1.43 cm rad x 28.6 cm long (20 radiation length)
- Materials :
  - Concrete [MARS default : 2.35 G/CM3 H(0.110509), C(0.046369), O(0.580162), Na(0.008075), Al(0.020641), Si(0.132200), K(0.004748),Ca(0.092642), Fe(0.004654)]
  - Air [MARS default : 1.2100E-03 G/CM3, H(0.011432), N(0.770643), O(0.213274), Ar(0.004651)]
- Thresholds :
  - Star production : 5.0e-2GeV
  - Charged hadron and muon : 2.0e-4 GeV
  - Neutron : 1.0e-12GeV
  - Photon 2.0e-4GeV
  - Electron : 2.0e-4 GeV
  - Neutrino : 1,0e-2GeV
  - Evaporation : 0.0e0 GeV

MARS : Results (Shaft)

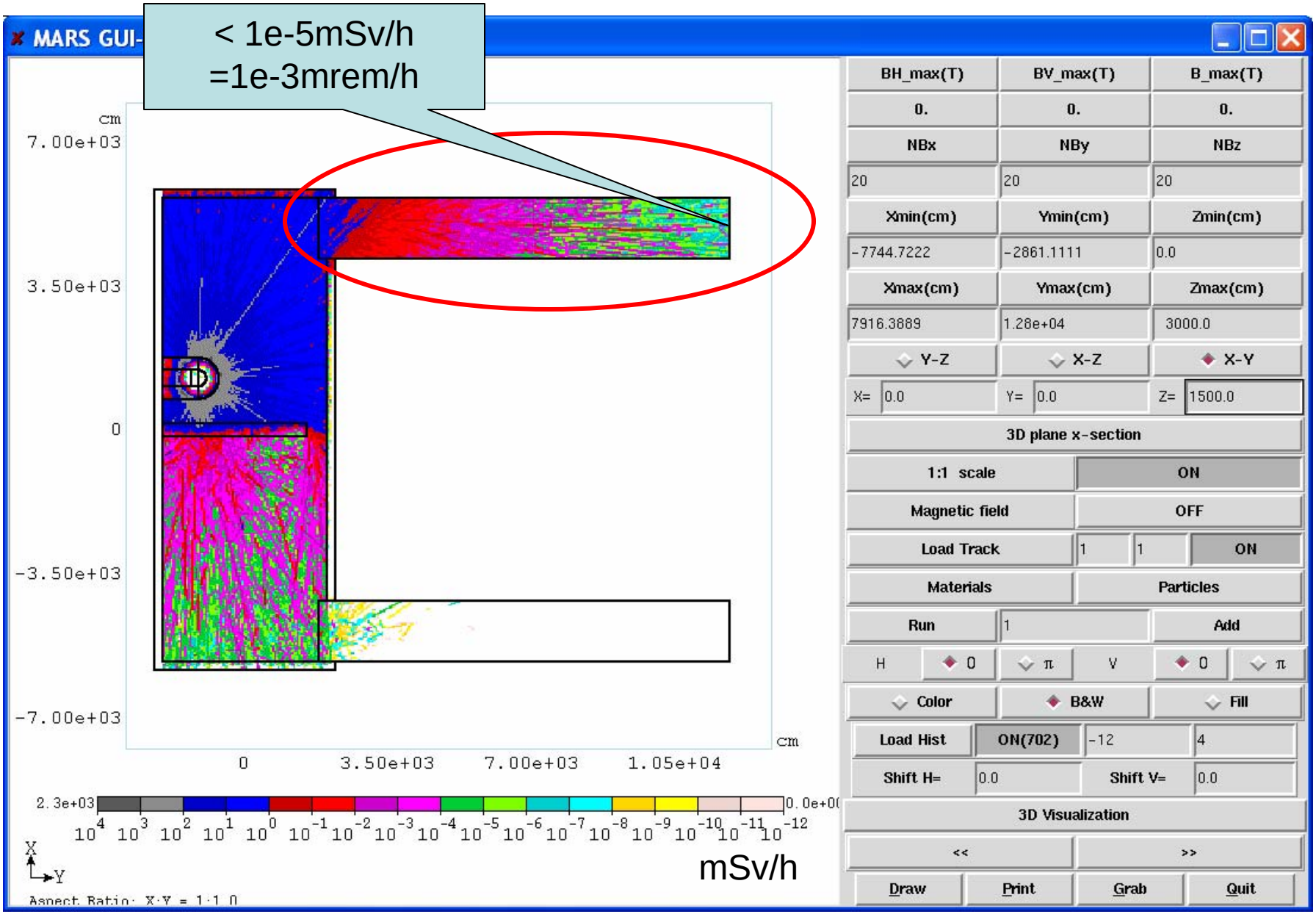

Issue 2, MARS : Results (hall, elevation)

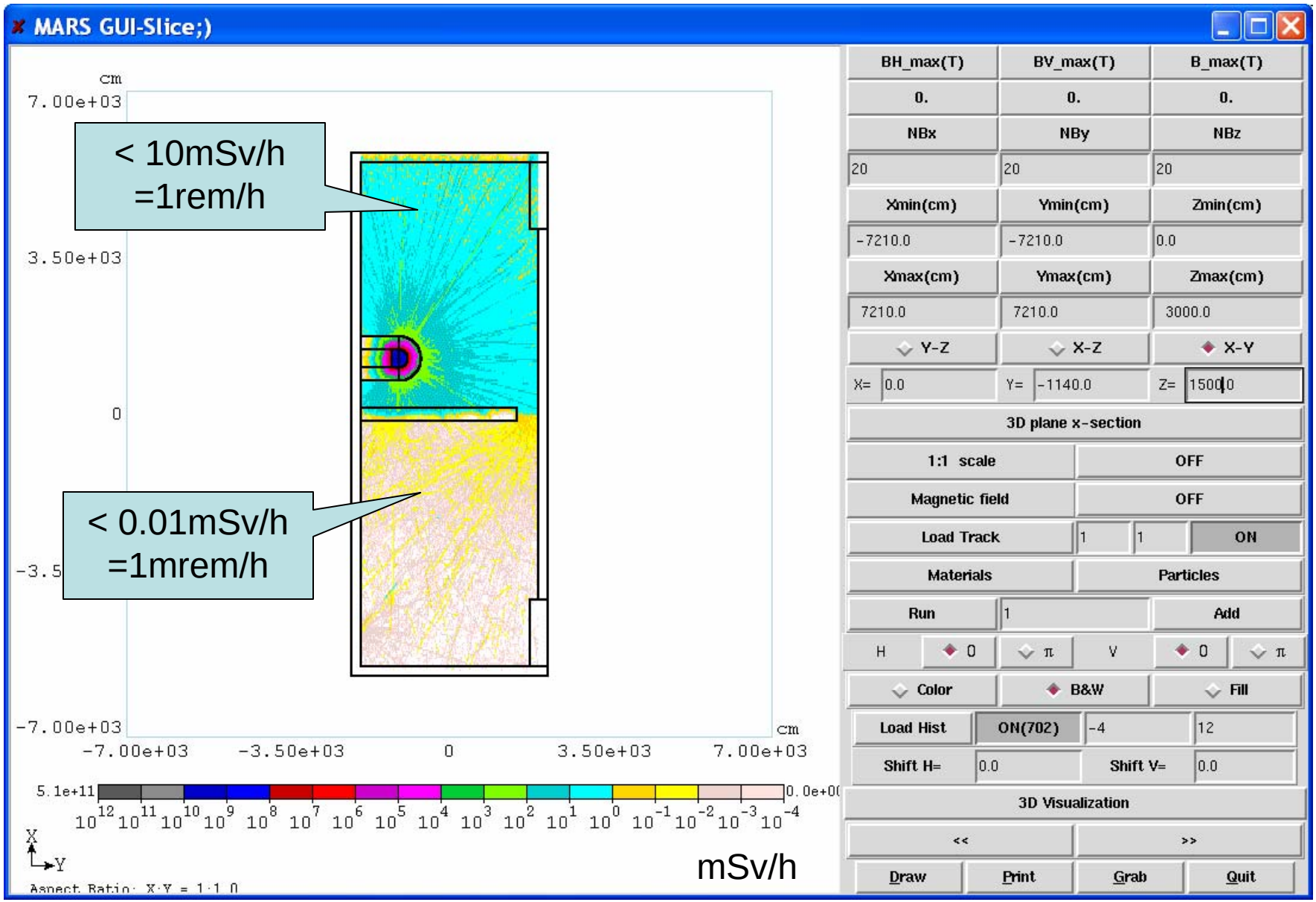

Issue 2, MARS : Results (hall, horizontal)