An idea for the ATF2 FF quads, from Cherrill Spencer

- The quads called QM16.. 11, QD10,..QF7 etc are quite weak quads, QM14 has max ∫G.dl at 73.2Kg, most are under 32Kg. (using Seryi's Feb 15th list of quad parameters, see 3rd slide)
- Has been suggested we use some of the old SLC "reverse bend" quads for these ATF2FF quads. I think that is not a good idea for these reasons:
- Seryi asks for 15mm radius bore. SLC quads have 6.35mm
- SLC quads designed for ∫G.dl ~222Kg. Core behavior at small fractions of design strength is unknown.
- SLC quads have only 32 turns and lower inductance than what I think Kumuda-san wants
- If use original power supplies, their regulation may not be best at the low currents needed to produce the really low ∫G.dl
- SUGGEST instead we take a "cheap" quad design I made for another project: 2.1Q5.87 (2.1"dia = 26.67mm radius), reduce the bore to 15mm, then can keep same coils & produce req'd ∫G.dl .

Modify the 2.1Q5.87 style to make the ATF2 quads

- The 2.1Q5.87 were made for the Linac sector 10 bunch compressor chicane.
- They have #10 square solid copper wire coils, 84 turns per coil.
- They have solid low carbon steel plate cores
- Their effective length is 0.1759m; their physical, overall length is 19.6 cm
- If I modified my design to reduce the bore to 30mm, then the original coils will be sufficient to produce the $\int G.dl$ for the ~1.44Kg poletips on latest quad list. I'd need to increase the turns for higher Bs
- See next slide for photo of the installed 2.1Q5.87 magnet .
- See following 2 slides for drawings of its top assembly and core
- My cost estimate : approx $4000 each, possibly cheaper)
- (I have NOT looked at QF1, QD0 specs, they need diff. design)

Latest list of ATF2 FF quads (from Seryi, 12;22pm, 15th Feb)

Quads	L(m)	B(kGs)	at R(mm)
QM16	0.2	-3.75	15
QM15	0.2	4.66	15
QM14	0.2	-5.49	15
QM13	0.2	2.84	15
QM12	0.2	3.03	15
QD10	0.2	-1.20	15
QD10	0.2	-1.20	15
QF9	0.2	1.44	15
QF9	0.2	1.44	15
QD8	0.2	-2.16	15
QF7	0.2	2.31	15
QD6	0.2	-2.16	15
QF5	0.2	1.44	15
QF5	0.2	1.44	15
QD4	0.2	-1.20	15
QD4	0.2	-1.20	15
QD2B	0.2	2.26	15
QF3	0.2	-0.95	15
QD2A	0.2	-1.05	15
QF1	0.4	1.75	15
QD0	0.5	-2.30	15

- total: 21

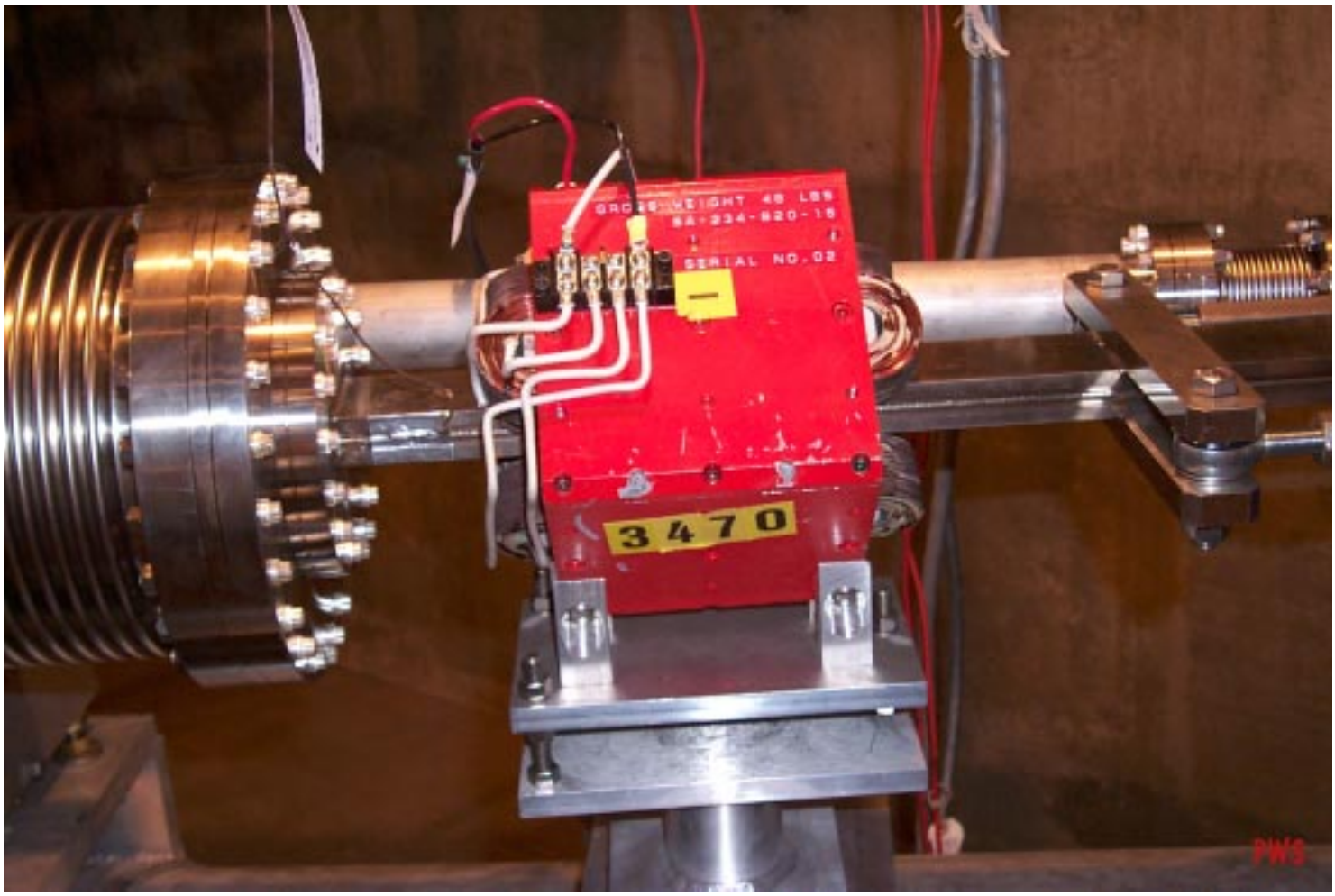
GROSS WEIGHT 45 LBS
SA-234-820-15
SERIAL NO.02
3470
PWS

REV	DESCRIPTION	DWN	CHKR	APVD	DATE
1	CORRECTED PART NO. ITEM 3 AND CORRECTED WIRE CONNECTIONS AS SHOWN. ADDED NOTE 2 REGARDING G-10 SHIMS	T.O.			7/02

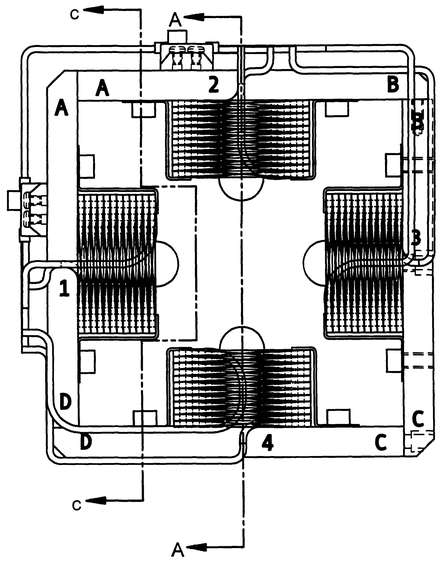

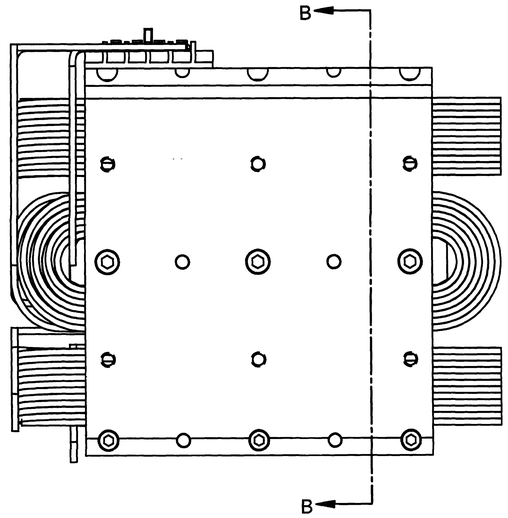

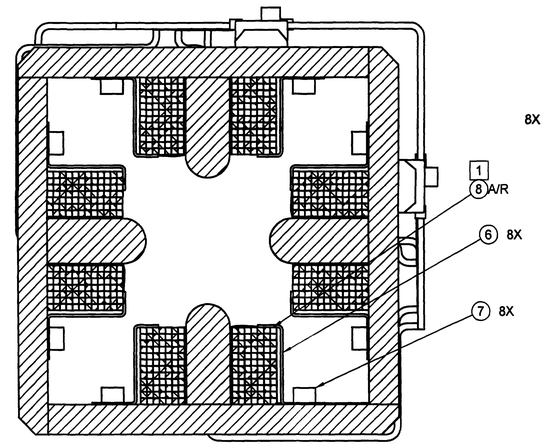

SECTION B-B

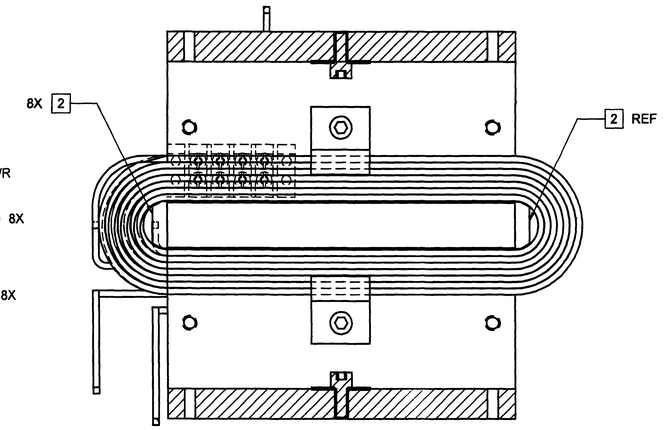

SECTION C-C

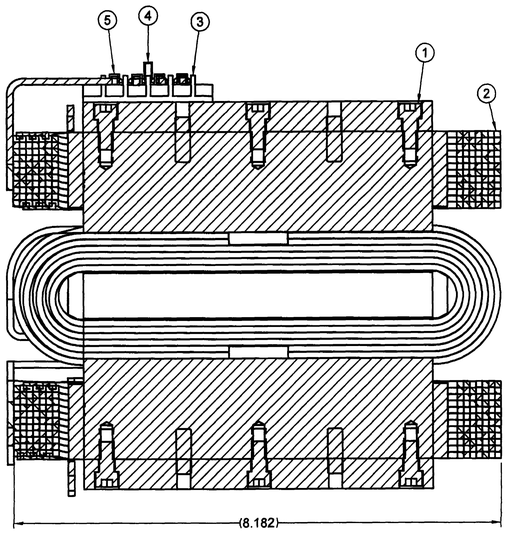

SECTION A-A

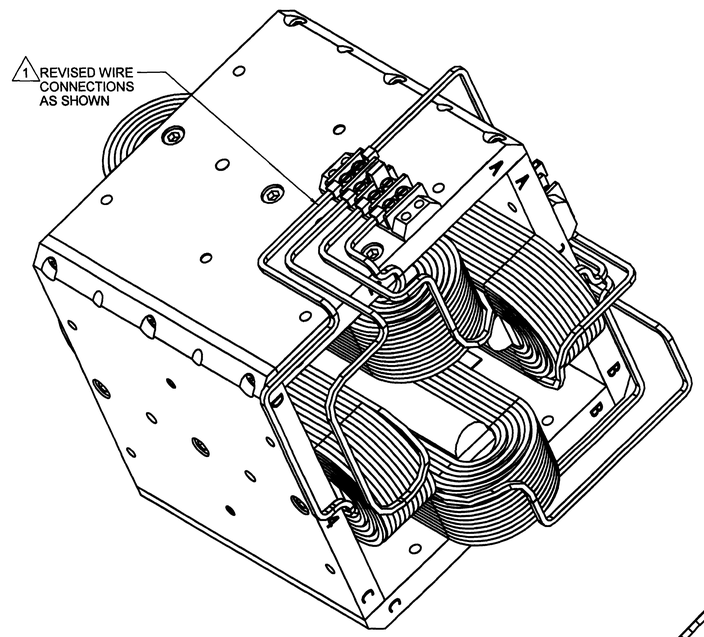

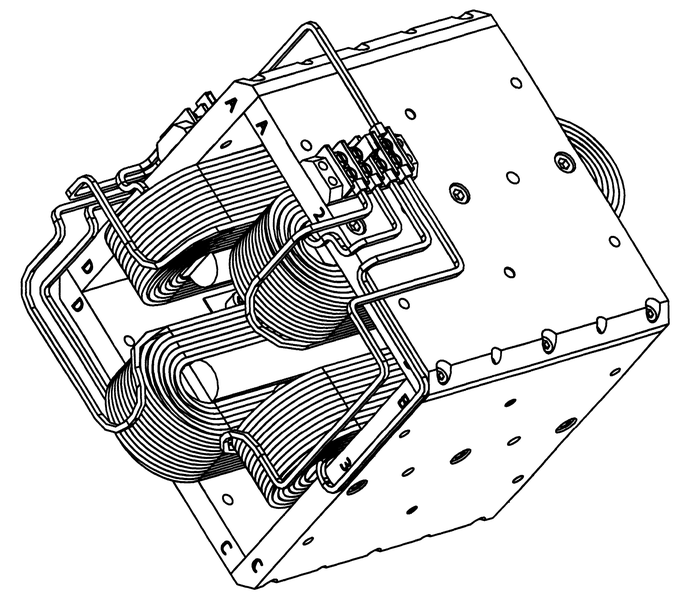

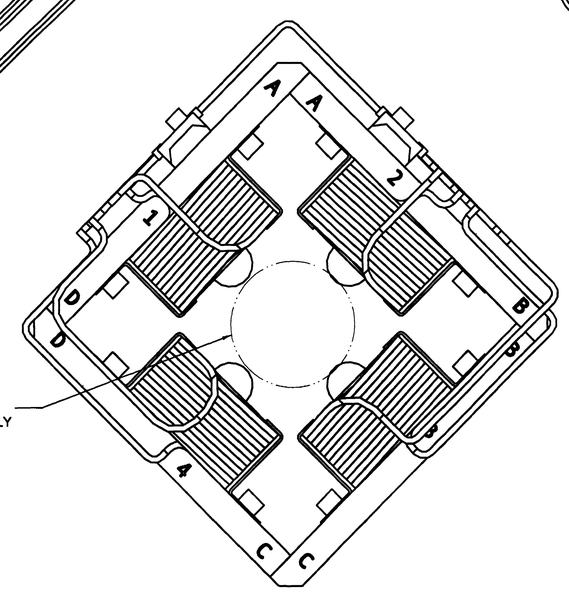

NOTES:

SOME MAGNET PARAMETERS:

∫GdI AT 8.67 = 4Kg

84 TURNS PER COIL

VOLTAGE AT 8.67A = 4.1 VOLTS

1 USE ESSEX POLYMAT 100 MATERIAL (ITEM 8) TO INSULATE COIL (ITEM 2) FROM COIL BRACKET (ITEM 6).

2 SHIM COILS AS SHOWN WITH G-10 (FIBER GLASS) TO SECURE COIL LOCATION.

SEE DESIGN DATA SHEET DD-234-820-34

ITEM	STOCK OR PART NO	TITLE OR DESCRIPTION	QTY
8		ESSEX POLYMAT 100, .006 THK. (DMD)	A/R
7		SCREW, CAP, SCH, HEX, 1/4-20 UNC-2A X .5, SST 316	8
6	PF-234-820-35	COIL BRACKET	8
5	630618SB	SNAP SPADE LUG # 10-12 (PETERS-DE LAET INC)	10
4	59-294-630-02	TERMINAL BLOCK JUMPER	2
3	59-294-601-04	TERMINAL BLOCK, 4 LUG KULKA #671-4	2
2	SA-234-820-20	COIL	4
1	SA-234-820-17	CORE ASSEMBLY	1

1

SA-234-820-

NEXT ASSEMBLIES:

DIMENSIONING AND TOLERANCING IS IN ACCORDANCE WITH ASME Y14.5M-1994

UNLESS OTHERWISE SPECIFIED DIMENSIONS ARE IN INCHES. TOLERANCES BREAK EDGES .005-.015 INTERNAL CORNERS R 0.15 MAX

FRACTIONS ± —
DEC .XX ± .03
.XXX ± .015
.XXXX ± —
ANGLE ± — ALL SURF

SCALE: 2:1

DO NOT SCALE DRAWING

CAD FILE NAME: sa23482016.dft

STANFORD LINEAR ACCELERATOR CENTER
U.S. DEPARTMENT OF ENERGY
STANFORD UNIVERSITY STANFORD, CALIFORNIA

PROPRIETARY DATA OF STANFORD UNIVERSITY AND/OR U. S. DEPARTMENT OF ENERGY. RECIPIENT SHALL NOT PUBLISH THE INFORMATION WITHIN UNLESS GRANTED SPECIFIC PERMISSION OF STANFORD UNIVERSITY.

		DATE	APPROVALS
ENGR	C. RAGO		C. SPENCER
DWN	T. OSIER	4/25/02	—
CHKR	H.ATILES		—

LINAC SCTR 10 BUNCH CPRSR 2.1Q5.87 QUAD MAGNET MAGNET ASSEMBLY

DRAWING NUMBER: SA-234-820-16

REVISION NUMBER: 1

E

LINAC SCTR 10 2.1Q5.87 MAG ASSY

REV	DESCRIPTION	DWN	CHK	APVD	DATE

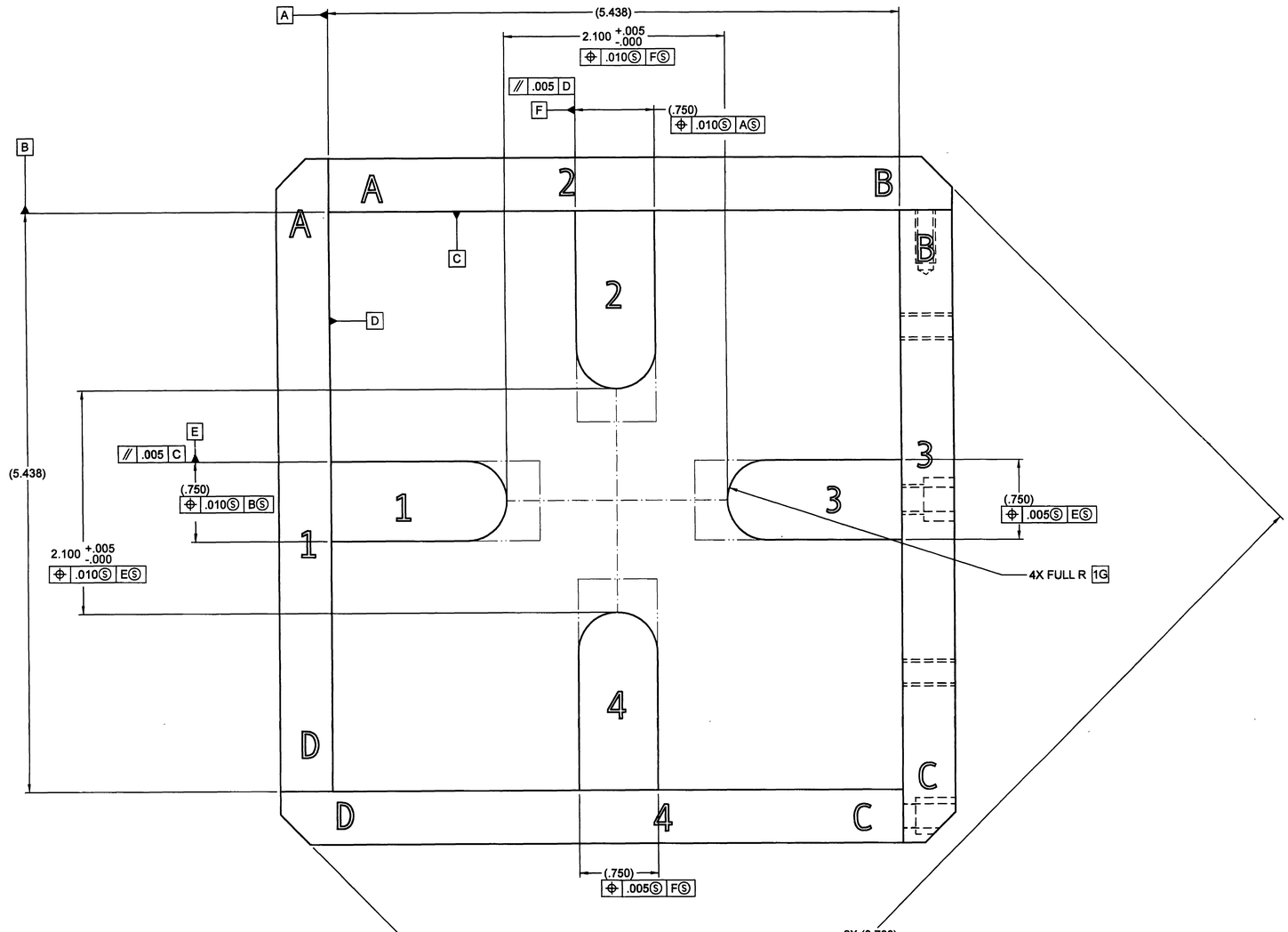

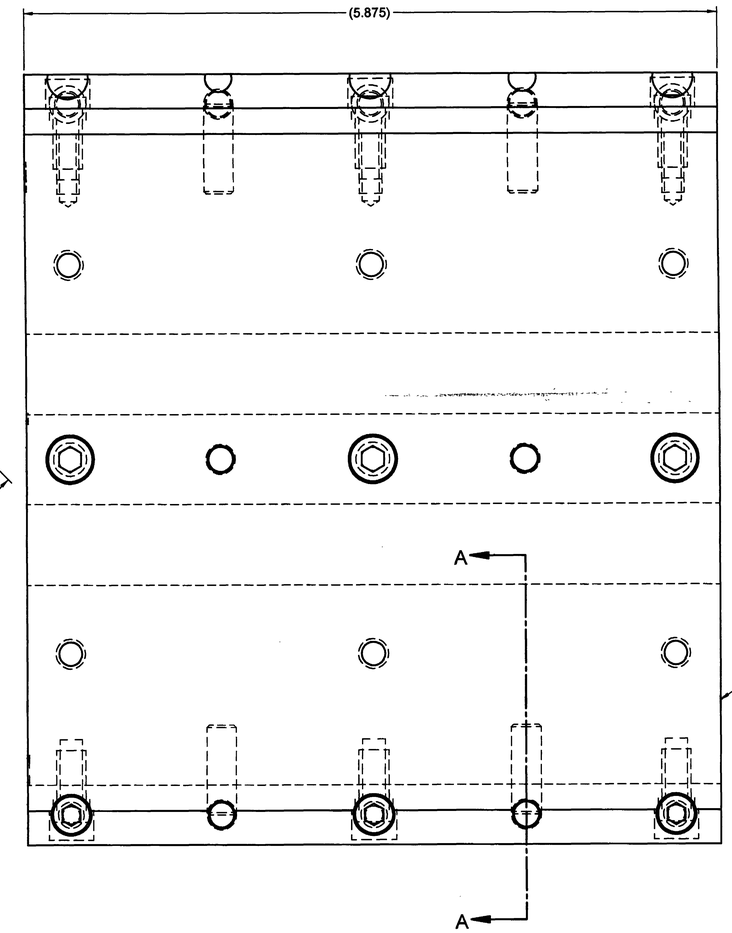

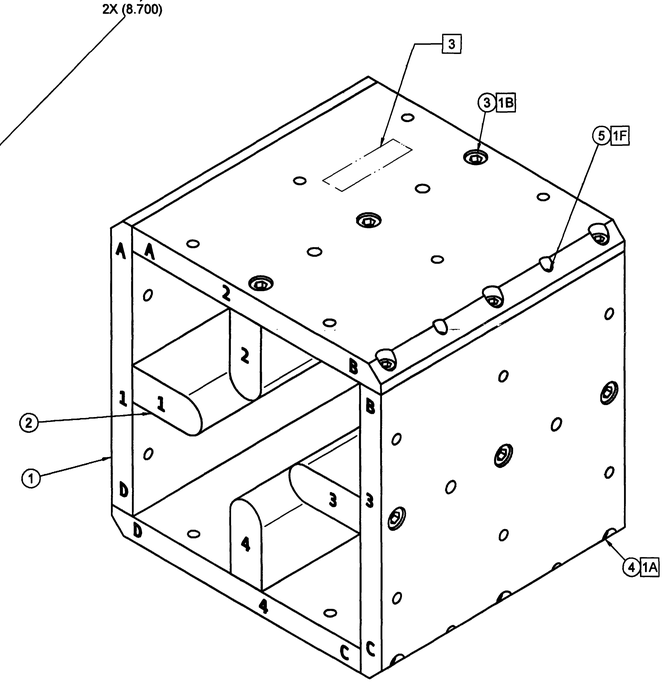

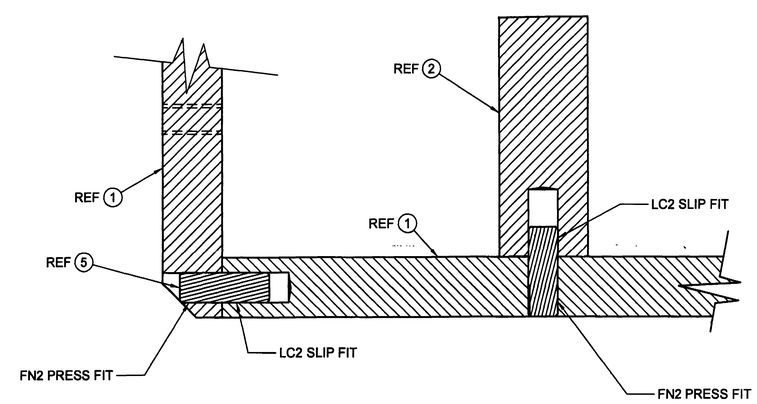

SECTION A-A 1E
2:1

NOTES:

1 ASSEMBLY PROCEDURE:

A. ASSEMBLE TOGETHER, FOUR SIDE PLATES, ITEM 1, USING SOCKET HEAD CAP SCREWS, ITEM 4, AND ALIGN ALL INSIDE SURFACES OF SIDE PLATE AS PERPENDICULAR AS POSSIBLE TO INDICATED STARTING SURFACE AND EACH OTHER, BEFORE COMPLETING THE TORQUE OF 50 PLUS/MINUS 2.5 IN-LBS

B. ASSEMBLE POLE PIECES, ITEM 2, TO SIDE PLATES, AS SHOWN, USING SOCKET HEAD CAP SCREWS, ITEM 3. ASSURE POLE PIECE PARALLEISM AND SYMMETRY TO EACH OTHER IS ACCOMPLISHED, BEFORE TORQUING CAP SCREWS, ITEM 3, TO 10 PLUS/MINUS .50 FT-LBS.

C. AFTER STEPS A AND B HAVE BEEN ACCOMPLISHED, COMMENCE THE PINNING PROCESS BY DRILLING THROUGH THE EXISTING .228 DIAMETER PILOT HOLES IN THE SIDE PLATES FOR PIN LOCATIONS.

D. AFTER COMPLETION OF STEP C, STAMP, IN .25 INCH HIGH CHARACTERS, CORRESPOUNDING NUMBERS AND LETTERS ON OPPOSITE SIDE OF STARTING SURFACE, BEFORE DISASSEMBLING TO CONTINUE THE PINNING PROCESS.

E. AFTER COMPLETION OF STEP D,CONTINUE THE PINNING PROCESS FOR THE RESPECTIVE FN2 PRESS FIT AND THE LC2 SLIP FIT AS SHOWN, IN SECTION A-A.

F. PRESS FIT PINS, (DOWEL PINS TO BE FLUSH OR BLOW FLUSH OUTSIDE SURFACE OF PLATES). REASSEMBLE AND RETORQUE ASSEMBLY.

G. THE ASSEMBLY IS NOW READY TO ACCEPT THE FULL RADIUS ONTO THE THE POLE PIECES, VIA THE E D M PROCESS.

2. PAINT: CLEAN ALL SURFACES AND EDGES WITH ACETONE OR EQUIVALENT. MASK ALL THREADS, DOWELS AND DOWEL HOLES. PRIME WITH RUSTOLEUM PRIMER. SPRAY WITH ECO SURE HIGH SOLIDS ENAMEL A-A-2787 TYPE 1 LOW VOC AEROSOL PAINT GLOSS RED 11136.

3 AFTER PAINTING STENCIL, WHERE INDICATED, IN .50 INCH HIGH CHARACTERS:
A. "GROSS WEIGHT 48 LBS".
B. MAGNET ASSY NO. "SA-234-820-16 AND CORE ASSY SERIAL NO.

ITEM	STOCK OR PART NO	TITLE OR DESCRIPTION	QTY
5		DOWEL PIN, .250 DIA X .75 L STL	16
4		SCREW, SOC HD CAP, #10-24 UNC-2A X .50, STEEL GRD 8	12
3		SCREW, SOC HD CAP, 1/4-20 UNC-2A X .625, STEEL GRD 8	12
2	PF-234-820-19	POLE PIECE BLANK	4
1	PF-234-820-18	SIDE PLATE	4

NEXT ASSEMBLIES: SA-234-820-16

DIMENSIONING AND TOLERANCING IS IN ACCORDANCE WITH ASME Y14.5M-1994.
UNLESS OTHERWISE SPECIFIED DIMENSIONS ARE IN INCHES.
TOLERANCES:
BREAK EDGES .005-.015
INTERNAL CORNERS R.015 MAX
FRACTIONS ± —
DEC .XX ± —
.XXX ± —
.XXXX ± —
ANGLE ± — ALL SURF

SCALE: 2:1 DO NOT SCALE DRAWING CAD FILE NAME: MQ23482017.dft

STANFORD LINEAR ACCELERATOR CENTER
U.S. DEPARTMENT OF ENERGY
STANFORD UNIVERSITY STANFORD, CALIFORNIA

PROPRIETARY DATA OF STANFORD UNIVERSITY AND/OR U. S. DEPARTMENT OF ENERGY. RECIPIENT SHALL NOT PUBLISH THE INFORMATION WITHIN UNLESS GRANTED SPECIFIC PERMISSION OF STANFORD UNIVERSITY.

		DATE
ENGR	C. RAGO	
DWN	T. OSIER	3/20/02
CHKR	H.ATILES	
APPROVALS	C. SPENCER	28 MAR 02
	S. DEBARGER	28 MAR 02

LINAC SCTR 10 BUNCH CPRSR 2.1Q5.87 QUAD MAGNET CORE ASSY

DRAWING NUMBER: SA-234-820-17 REVISION NUMBER: 0 E

LINAC SCTR10 21Q587 QUAD CORE

SA-234-820-17 0 E SH 1 OF 1